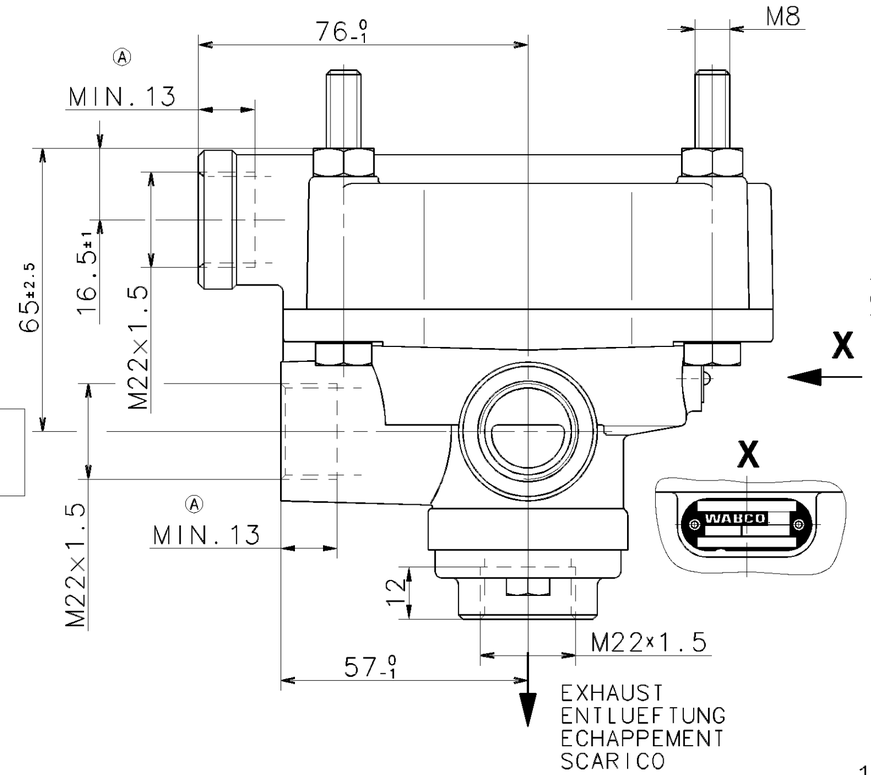

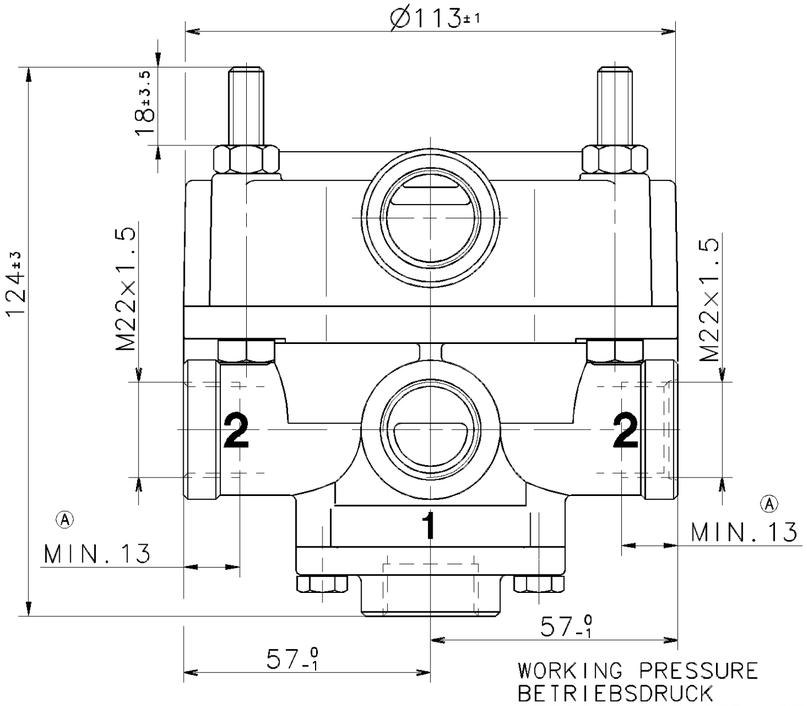

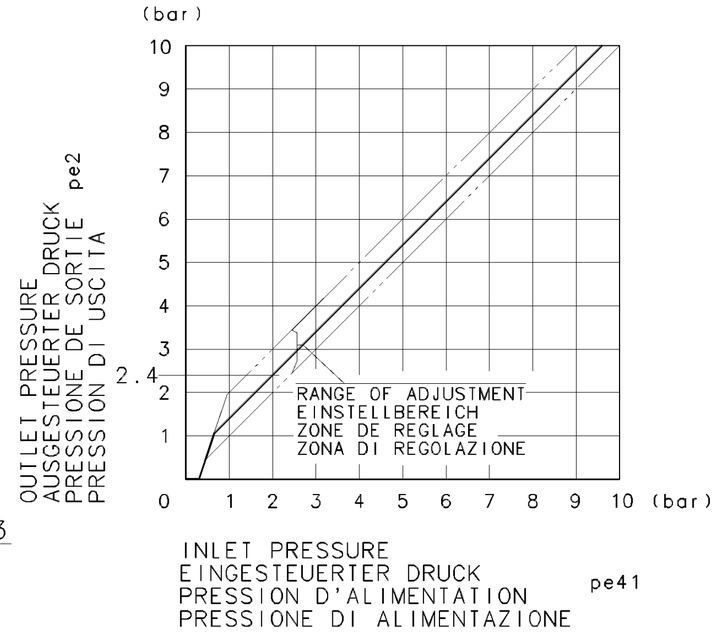

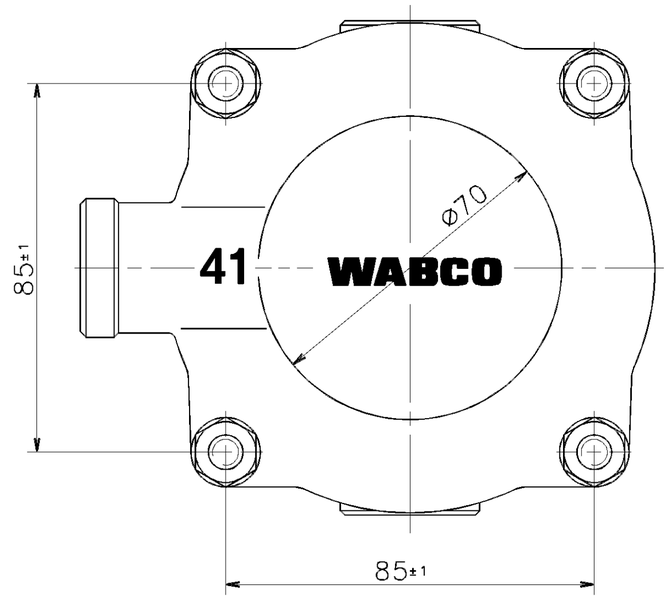

1 SUPPLY
VORRAT
ALIMENTATION (pe 1)
ALIMENTAZIONE

2 OUTLET PRESSURE
AUSGESTEUERTER DRUCK
PRESSION DE SORTIE (pe 2)
PRESSIONE EROGATA

41 CONTROL PRESSURE
STEUERDRUCK
PRESSION DE COMMANDE (pe 41)
PRESSIONE DI COMANDO

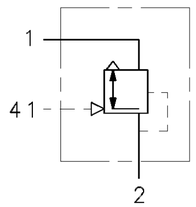

WORKING PRESSURE :
BETRIEBSDRUCK : *pe1=10 bar ; **pe1=12,5 bar
PRESSION DE SERVICE :
PRESSIONE DI SERVIZIO: pe41=10 bar

PERMISSIBLE PRESSURE : pe1 =MAX. 14 bar TEMPORARILY
ZULAESSIGER DRUCK : KURZZEITIG
PRESSION ADMISSIBLE : pe41=MAX. 12 bar DE COURTE DUREE
PRESSIONE AMMISSIBILE : BREVE TEMPO SOLO

THERMAL RANGE OF APPLICATION:
* THERMISCHER ANWENDUNGSBEREICH: -40°C...+80°C
APPLICATION THERMIQUE:
CAMPO DI APPLICAZIONE THERMICA:

THERMAL RANGE OF APPLICATION:
** THERMISCHER ANWENDUNGSBEREICH: -30°C...+80°C
APPLICATION THERMIQUE:
CAMPO DI APPLICAZIONE THERMICA:

MEDIUM: AIR
MEDIUM: LUFT
FLUIDE: AIR
FLUIDO: ARIA

INSTALLATION POSITION: EXHAUST SHOWN AT BASE (AXIS CENTRE OF THE DEVICE DEVIATES MAX 90° FROM VERTICAL)
EINBAULAGE: ENTLUEFTUNG NACH UNTEN (MITTELACHSE DES GERAETES MAX 90 ° VON DER SENKRECHTEN ABWEICHEND)
POSITION D'INSTALLATION: ECHAPPEMENT VERS LE BAS (ECART DE L'AXE MEDIAN DE L'APPAREIL PAR RAPPORT A LA VERTICA E: 90° MAX.)
POSIZIONE DI MONTAGGIO: SCARICO VERSO IL BASSO (DEVIAZIONE ASSE APPARECCHIO RISPETTO ALLA VERTICALE:MAX.90°)

GENERAL SPECIFICATION: JED-334						
FURTHER TECHNICAL DATA:						
DOC. CODE:	SHEET: TO					
GENERAL TOLERANCES						
CLASS 1)	RANGE OF NOMINAL DIMENSIONS (± mm) ≤50	> 50 ≤180	>180 ≤400	>400	∢	
FINE	0,5	1,0	1,5	2,0		
MEDIUM	1,0	2,0	3,0	4,0	± 3°	
COARSE	2,0	3,5	5,0	6,5		
TAPPED HOLES ACC. ISO 4039 / JED-152					083220	4xA 02-04-22
1) TOLERANCE CLASS APPLIED CROSSMARKED					DCN-NO.	REV. DATE

CADAM-DRAWING COPYRIGHT

DATE	SIGNATURE
DRAWN: 00-08-09	MEINKING
CHECKED: 00-08-09	FABIAN
STANDARDIZATION:	

WABCO

RELAY VALVE
RELAISVENTIL
VALVE RELAIS
VALVOLA RELE

MASS	SCALE	PRODUCT IDENTIFICATION NO.	DOC. CODE	SHEET
1.2 KG	1:1	973 003 007 0	605	1/1
SIZE A 2	I.R.I. 140		SHAPE CODE	REPLACEMENT FOR

100mm

EXPERT CODE 2 2 2

PRODUCT TYPE 0 0 X

1009/012/3/04.93

605/653

TOUTE COMMUNICATION OU REPRODUCTION DE CE DOCUMENT, TOUTE EXPLOITATION OU COMMUNICATION DE SON CONTENU NON E PERMESSO CONSEGNARE A TERZI O RIPRODURRE QUESTO DOCUMENTO, NE UTILIZZARNE IL CONTENUTO O RENDERLO ACCESSIBILE A TERZI SANS AUTORISATION PREALABLE EST INTERDITE. TOUS DROITS DE PROPRIETE INDUSTRIELLE RESERVES, NOTAMMENT EN MATIERE DE BREVETS ET DE MODELES. WEITERGABE SOWIE VERVIELFAELTIGUNG DIESER UNTERLAGE, VERWERTUNG UND MITTEILUNG IHRES INHALTS NICHT GESTATTET SOWEIT NICHT AUSDRUECKLICH GESTATTET. ZUWIDERHANDLUNGEN VERPFLICHTEN ZU SCHADENERSATZ. ALLE RECHTE FUER DEN FALL DER PATENTERTEILUNG ODER MUSSBRAUCH DARUNDER VERPFLICHTEN ZU SCHADENERSATZ. ALLE RECHTE FUER DEN FALL DER PATENTERTEILUNG ODER GEBRAUCHSMUSTER-EINTRAGUNG VORBEHALTEN.
COPYING OF THIS DOCUMENT AND GIVING IT TO OTHERS AND THE USE OR COMMUNICATION OF THE CONTENTS THEREOF, ARE FORBIDDEN WITHOUT EXPRESS AUTHORITY. OFFENDERS ARE LIABLE TO THE PAYMENT OF DAMAGES. ALL RIGHTS ARE RESERVED IN THE EVENT OF THE GRANT OF PATENT OR REGISTRATION OF A UTILITY MODEL OR DESIGN. THIS DOCUMENT IS THE SUBJECT OF COPYRIGHT.