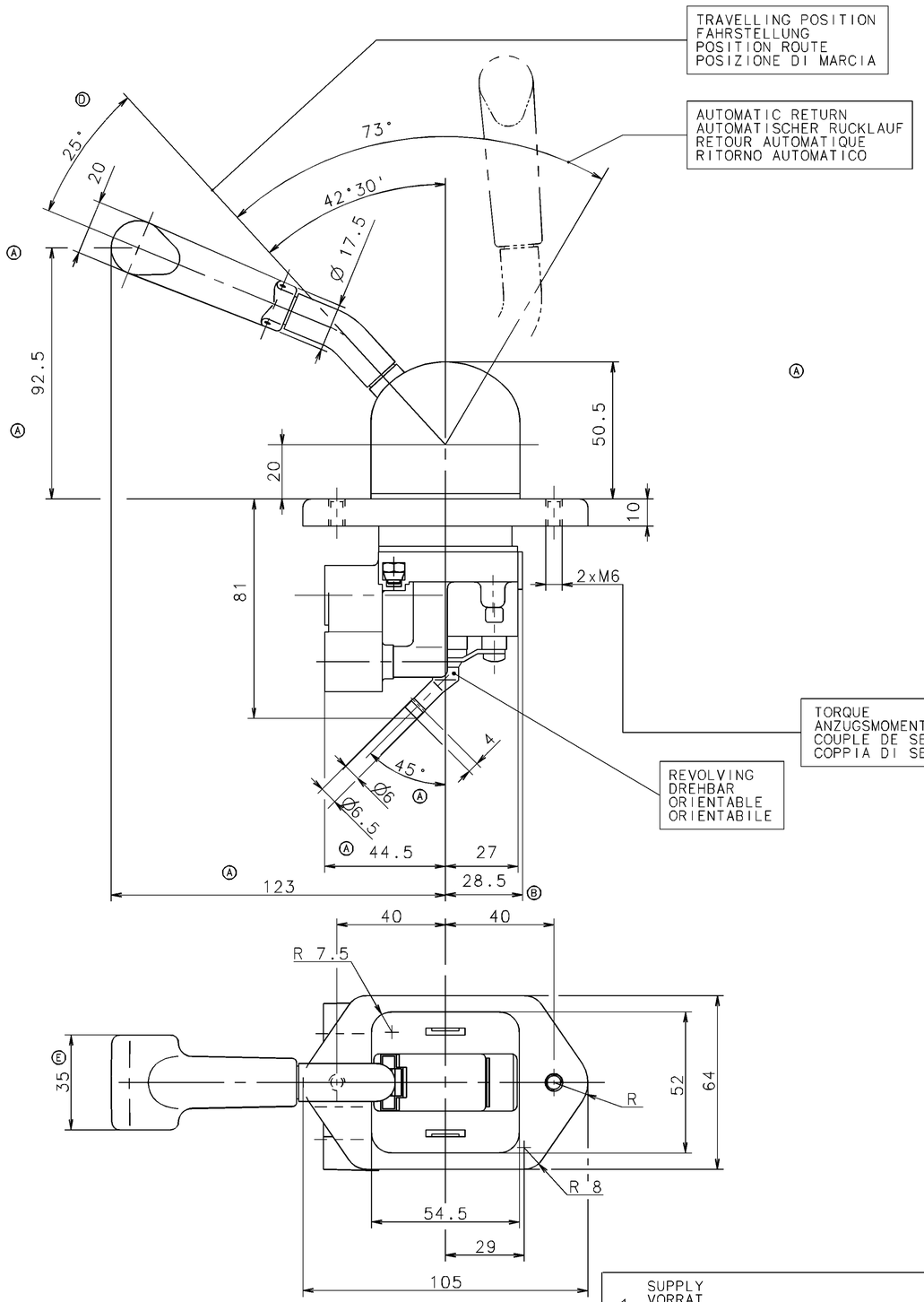

VUE V

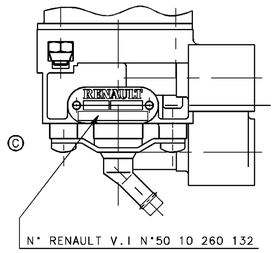

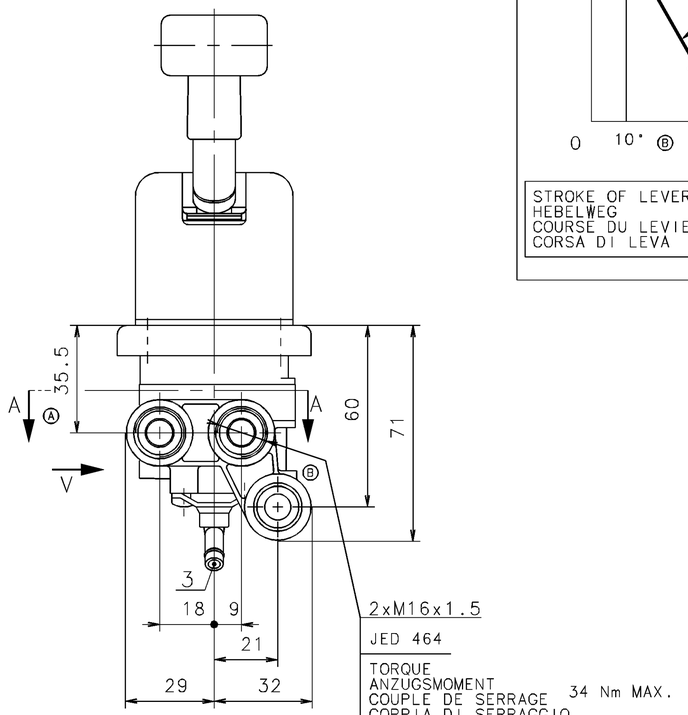

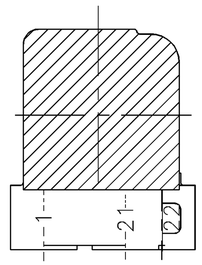

A-A

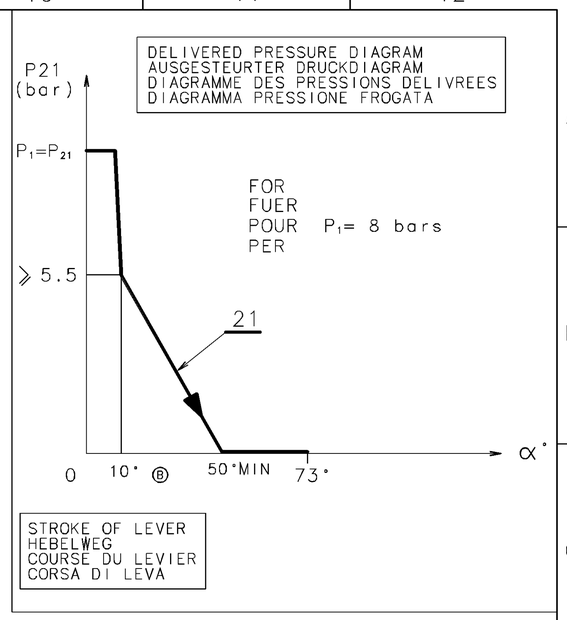

TESTING SHEME
SYMBOL
SCHEMA DE PRINCIPE
SCHEMA DI PRINCIPIO

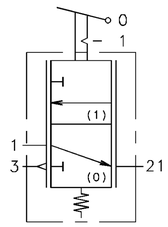

1	SUPPLY VORRAT ALIMENTATION ALIMENTAZIONE	MEDIUM : AIR MEDIUM : LUFT FLUIDE : AIR FLUIDO : ARIA
21	SPRING BRAKE CYLINDER FEDERSPEICHERZYLINDER CYLINDRE A RESSORT CILINDRO A MOLLA	THERMICAL RANGE THERMISCHER ANWENDUNGSBEREICH TEMPERATURE D'UTILISATION TEMPERATURA DI UTILIZZAZIONE -40°....+80°C
3	EXHAUST ENTLUEFTUNG ECHAPPEMENT SCARICO	SUPPLY PRESSURE VORRATSDRUCK PRESSION PNEUMATIQUE D'ALIMENTATION PRESSIONE PNEUMATICA DI ALIMENTAZIONE : P1= 10 BAR MAX.

FURTHER TECHNICAL DATA SEE
IDENTIFICATION NO.:
CODE FOR DOCUMENT: 605 SHEET: TO

GENERAL TOLERANCES

CLASS	RANGE OF NOMINAL DIMENSIONS (± mm) 1)	≤50	> 50 ≤180	>180 ≤400	>400	∢
I		0,5	1,0	1,5	2,0	
II		1,0	2,0	3,0	4,0	± 3°
III	■	2,0	3,5	5,0	6,5	

TAPPED HOLES ACC. ISO 4039 / JED-162
1) TOLERANCE CLASS APPLIED CROSSMARKED

DCN-NO.	REV.	DATE
96143	1x E	28-05-96
96132	1x D	10-05-96
95169	1x C	10-07-95
94234	4x B	07-12-94
94211	7x A	08-11-94

L
K
J
H
G
F

COPYRIGHT

DATE	SIGNATURE
DRAWN 14-06-93	ROLLAND
CHECKED 14-06-93	HAMARD
STANDARDIZATION 13-07-93	93135

WABCO

HAND BRAKE VALVE
HANDBREMSVENTIL
ROBINET DE FREINAGE A MAIN
ROBINETTO DI COMMANDO A MANO

MASS	SCALE	PRODUCT IDENTIFICATION NO.	CODE FOR DOCUMENT	SHEET
0,83 kg	1:1	961 723 420 0	605	1/1
SIZE A 1	T.R.I. 210	CODE F.PROD.-GROUP 521	CODE FOR SHAPE	REPLACEMENT FOR 884 608 446 0

100mm

EXPERT CODE ☐☐☐ TYPE OF PRODUCT ☐☐☒

86-01