FIRST ANGLE PROJECTION

LABEL MARKED WITH :-
1. PRODUCTION PLANT
2. DATE OF MANUFACTURE
3. REVISION LEVEL
4. PART NUMBER

SCHILD MIT AUFSCHRIFT:-
1. FERTIGUNGSWERK
2. HERSTELLDATUM
3. ANDERUNGSSTAND
4. TEILE NR.

ETIQUETTE COMPORTANT:-
1. USINE DE PRODUCTION
2. DATE DE FABRICATION
3. NIVEAU DE REVISION
4. NO. DE PIECE

ETICHETTA CONTRASSEGNATA CON:-
1. STABILIMENTO DI PRODUZIONE
2. DATA DI FABBRICAZIONE
3. LIVELLO DI REVISIONE
4. PARTICOLARE NO.

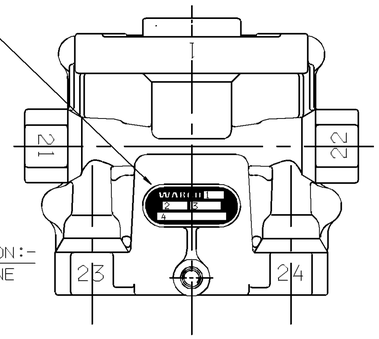

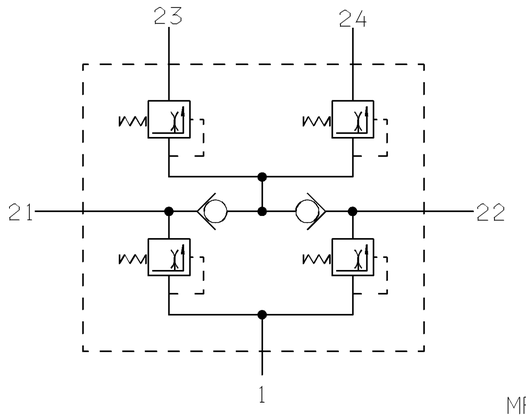

CONNECTIONS ANSCHLUESSE ORIFICES ORIFIZI		SUPPLY LUFTEINTRITT ALIMENTATION ALIMENTAZIONE
21- CIRCUIT 1 KREIS 1 CIRCUIT 1 CIRCUITO 1	22-	CIRCUIT 2 KREIS 2 CIRCUIT 2 CIRCUITO 2
23- CIRCUIT 3 KREIS 3 CIRCUIT 3 CIRCUITO 3	24-	CIRCUIT 4 KREIS 4 CIRCUIT 4 CIRCUITO 4

ADMISSIBLE TEMPERATURES.
THERMISCHER ANWENDUNGSBEREICH.
TEMPERATURE DE SERVICE
TEMPERATURA D'ESERCIZIO. -40°C TO +90°C

SERVICE PRESSURE.
BETRIEBSDRUCK. MAX 13 bar.
PRESSION DE SERVICE.
PRESSIONE D'ESERCIZIO.

MEDIUM	AIR
MEDIUM	LUFT.
MILIEU	AIR.
FLUIDO	ARIA.

Ⓔ VALVE MAY BE MOUNTED AT ANY ANGLE
VENTIL KANN IN BELIEBIGER LAGE MONTIERT WERDEN
LA SOUPAPE PEUT ETRE INSTALLEE A N'IMPORTE QUEL ANGLE
VALVOLA MONTABBILE A QUALSIASI ANGOLO

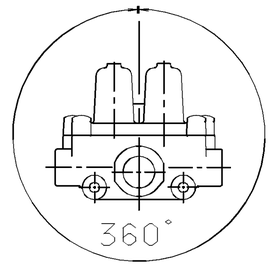

Ⓔ

MP=
M16×1.5-6H ×13 FULL THREAD
JED 152
TORQUE 35 Nm MAX.
M16×1.5-6H ×13 DURCHGEHENDES GEWINDE
JED 152
ANZUGSMOMENT 35 Nm MAX.
Ⓑ M16×1.5-6H ×13 FILET COMPLET
JED 152
COUPLE DE SERRAGE 35 Nm MAX.
Ⓒ M16×1.5-6H ×13 FILETTATURA COMPLETA
Ⓔ JED 152
COPPIA DI SERRAGGIO 35 Nm MAX.

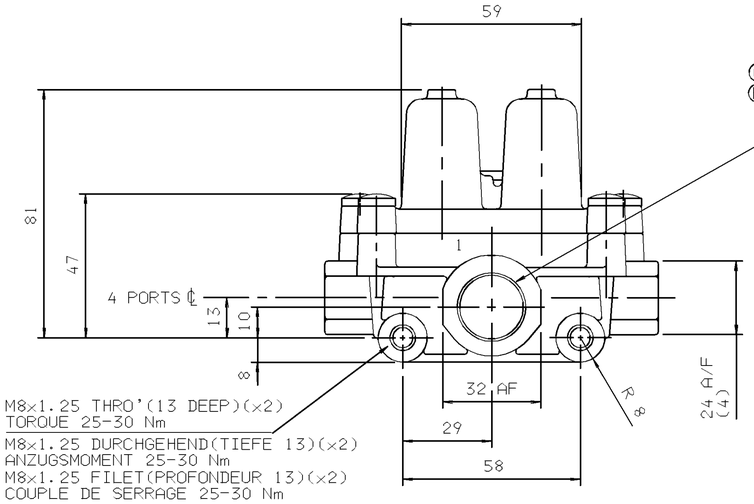

Ⓒ PORT 1
Ⓔ M22×1.5-6H ×16 FULL THREAD
JED 152
TORQUE 55 Nm MAX.

ANSCHLUESSE 1
M22×1.5-6H ×16 DURCHGEHENDES GEWINDE
JED 152
ANZUGSMOMENT 55 Nm MAX.

ORIFICES 1
M22×1.5-6H ×16 FILET COMPLET
JED 152
COUPLE DE SERRAGE 55 Nm MAX.

ORIFIZI 1
M22×1.5-6H ×16 FILETTATURA COMPLETA
JED 152
COPPIA DI SERRAGGIO 55 Nm MAX.

*

M8×1.25 THRO'(13 DEEP)(×2)
TORQUE 25-30 Nm
M8×1.25 DURCHGEHEND(TIEFE 13)(×2)
ANZUGSMOMENT 25-30 Nm
M8×1.25 FILET(PROFONDEUR 13)(×2)
COUPLE DE SERRAGE 25-30 Nm
M8×1.25 ATTRAVERSO(PROFONDITA 13)(×2)
COPPIA DI SERRAGGIO 25-30 Nm
ⒷⒺ

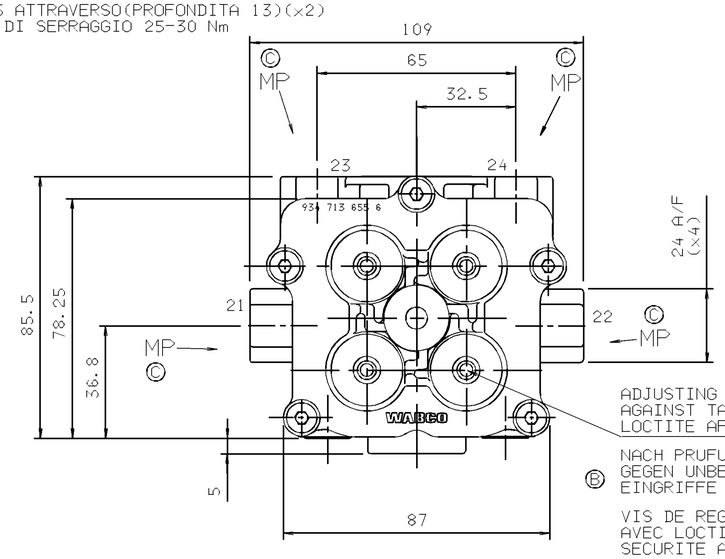

ADJUSTING SCREWS SECURED
AGAINST TAMPERING WITH
LOCTITE AFTER TEST.

Ⓔ NACH PRUFUNG MIT LOCTITE
GEGEN UNBEFUGTE
EINGRIFFE GESICHERT

VIS DE REGLAGE FIXEES
AVEC LOCTITE PAR
SECURITE APRES ESSAI

VITI DI REGOLAZIONE
FISSATE CONTRO
MANOMISSIONE CON LOCTITE
DOPO LE PROVE

Ⓑ CORROSION PROTECTION:-
KORROSIONSSCHUTZ
PROTECTION ANTICORROSIVE
PROTEZIONE ANTICORROSIONE

ALUMINIUM PARTS CHROMATED
TO CDS 155 (JED-128P)
ALUMINIUMTEILE CHROMIERT
GEMASS CDS 155 (JED-128P)
PIECES ALUMINIUM CHROMEES
POUR CDS 155 (JED-128P)
PEZZI IN ALUMINIO CROMATI
PER CDS 155 (JED-128P)

SCREWS MECHANICALY ZINC PLATED
AND YELLOW PASSIVATED
(FORD SPEC. S71M)
SCHRAUBEN MECHANISCH VERZINKT
UND GELB PASSIVIERT
(FORD SPEZIFIKATION S71M)
VIS MECANIQUEMENT ZINGUEES
ET PASSIVEES EN JAUNE
(SPEC.FORD S71M)
VITI MECCANICAMENTE ZINCATE
E PASSIVATE IN GIALLO
(SPEC.FORD S71M)

PORTS ORIFICES ANSHLUESSE ATTACCHI		21	22	23	24
OPENING PRESSURE Ⓕ OEFFNUNGSDRUCK PRESSION DE OUVERTURE PRESSIONE DI APERTURA	BAR	$6.9^{+0}_{-0.3}$	$6.9^{+0}_{-0.3}$	ⒺⒻ $7.0^{+0}_{-0.2}$ Ⓗ	$6.9^{+0}_{-0.3}$
CLOSING PRESSURE DYNAMIC SCHLIESSDRUCK DYNAMISCH PRESSION DE FERMETURE DYNAM PRESSIONE DI CHIUSURA DINAM	BAR	≥6.4 Ⓔ			
CLOSING PRESSURE STATIC AT FAILURE OF CIRCUIT .... SCHLIESSDRUCK STATISCH BEI AUSFALL VON KREIS .... PRESSION DE FERMETURE STATIQUE EN CAS DE DEFAILLANCE DU CIRCUIT .... PRESSIONE DI CHIUSURA STATICA IN CASO DI DIFETTO DEL CIRCUITO	BAR	0	≥5.5	≥6.7	
		≥5.5	0	≥6.7	
		≥5.5		0	≥5.5
		≥5.5		≥5.5	0

DRAWING PRODUCED ON CADAM
MANUAL CHANGES PROHIBITED

DIMENSIONS IN MILLIMETRES

FURTHER TECHNICAL DATA SEE						
IDENTIFICATION No.:						
CODE FOR DOCUMENT:	SHEET:	TO				
GENERAL TOLERANCES						
CLASS	1)	RANGE OF NOMINAL DIMENSIONS (mm) ≤50	>50 ≤180	>180 ≤400	>400	∢
I		0.5	1	1.5	2	
II		×1	2	3	4	±3°
III		2	3.5	5	6.5	

1) TOLERANCE CLASS APPLIED CROSSMARKED

	L		
	K		
	J		
300550	1H	19/ 2/98	
300545	2G	17/02/98	
300280	-F	16/06/97	
300198	8E	02/04/97	
6152	-D	11/ 4/96	
5925	6C	25/ 9/95	
5892	6B	30/ 2/95	
5621	A	02/03/95	
ECN-No	REV	DATE	

COPYRIGHT

	DATE	SIGNATURE
DRAWN	02/03/95	N.Sanderson
CHECKED	02/03/95	M.Flett
EXPERT CODE	310	

WABCO

QUADRUPLE CIRCUIT PROTECTION VALVE.
VIERKREIS - SCHUTZVENTIL.
VALVE DE PROTECTION LA 4 CIRCUITS.
VALVOLA DI PROTEZIONE LA 4 CIRCUITI.

MASS	SCALE	PRODUCT SPECIFICATION No	DOCUMENT CODE	SHEET
kg	1:1	934 714 010 0	605	1/1
SIZE A1	T.R.I 300	PROD. GROUP 512 / SHAPE CODE / PRODUCT TYPE 002	REPLACEMENT FOR	

100 mm

TOUTE COMMUNICATION OU REPRODUCTION DE CE DOCUMENT, TOUTE EXPLOITATION OU COMMUNICATION DE SON CONTENU SONT INTERDITES SAUF AUTORISATION EXPRESSE. TOUT MANQUEMENT A CETTE REGLE CONSTITUE UN DELIT DE CONTREFACON. TOUS DROITS DE PROPRIETE INDUSTRIELLE RESERVES. NOTAMMENT EN MATIERE DE BREVETS ET DE MODELES DEPOSES.
VERTEILUNG UND MITTEILUNG DIESER UNTERLAGE VERBOTEN, SOFERN NICHT AUSDRUCKLICH ZUGESTANDEN. ZUWIDERHANDLUNGEN STELLEN EINEN OFFENSICHTLICHEN MISSBRAUCH DAR UND VERPFLICHTEN ZU SCHADENSERSATZ. ALLE RECHTE FUER DEN FALL DER PATENTERTEILUNG ODER GEBRAUCHSMUSTER-EINTRAGUNG VORBEHALTEN.
NON E PERMESSO CONSEGNARE A TERZI O RIPRODURRE QUESTO DOCUMENTO, COMUNICARNE IL CONTENUTO O RENDERLO ACCESSIBILE A TERZI SENZA AUTORIZZAZIONE ESPRESSA. TUTTI I DIRITTI DI PROPRIETA INDUSTRIALE SONO RISERVATI, IN PARTICOLARE I DIRITTI DERIVANTI DA BREVETTI O MODELLI.
ANY USE OR COMMUNICATION OF THE CONTENTS OF THIS DOCUMENT IS NOT PERMITTED WITHOUT EXPRESS AUTHORISATION. ALL RIGHTS ARE RESERVED IN THE EVENT OF THE GRANT OF A PATENT OR THE REGISTRATION OF A UTILITY MODEL OR DESIGN. THIS DOCUMENT IS THE SUBJECT OF COPYRIGHT.