| SURFACE PROTECTION<br>OBERFLAECHENSCHUTZ<br>PROTECTION DE SURFACE<br>PROTEZIONE SUPERFICIALE | I JED-259 | |
|---|---|---|
| | II JED-256 | |
| | III JED-352 | |
| | IV JED-534.1 | |

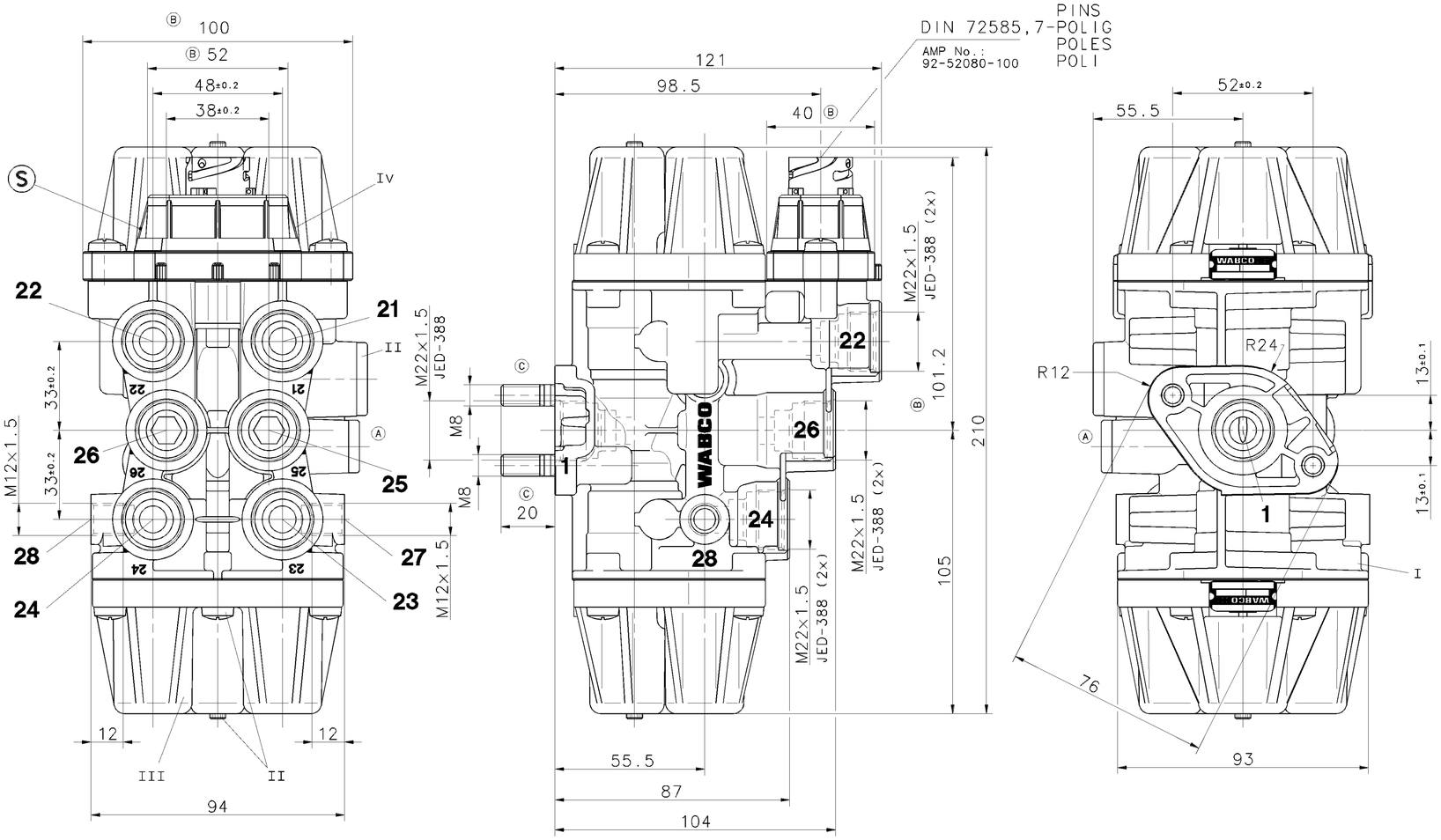


THERMAL RANGE OF CONTINUOUS APPLICATION:
THERMISCHER DAUERANWENDUNGSBEREICH:
PLAGE DE TEMPERATURE EN UTILISATION CONTINUE: -40°C....+80°C
COMPO DI APPLICAZIONE CONTINUA:

MEDIUM: COMPRESSED AIR
MEDIUM: DRUCKLUFT
FLUIDE: AIR COMPRIME
FLUIDO: ARIA COMPRESSA

WORKING PRESSURE:
BETRIEBSDRUCK:
PRESSION DE SERVICE:
PRESSIONE D' ESERCIZIO: $p_e$max.=13bar

INSTALLATION POSITION OPTIONAL
EINBAULAGE BELIEBIG
POSITION D' INSTALLATION A VOLONTE
POSIZIONE DI MONTAGGIO A SCELTA

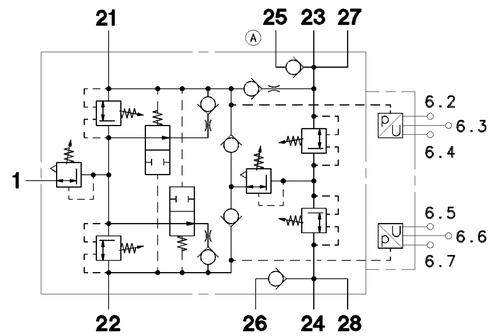


| CONNECTIONS:<br>ANSCHLUESSE:<br>ORIFICES:<br>ORIFIZI: | 1 | | FROM AIR DRYER<br>VOM LUFTTROCKNER<br>DE DESSICATEUR D'AIR<br>ESSICATORE D'ARIA |
|---|---|---|---|
| | 21 | CIRCUIT<br>KREIS<br>CIRCUIT<br>CIRCUITO | 1 |
| | 22 | | 2 |
| | 23, 25, 27 | | 3 |
| | 24, 26, 28 | | 4 |

| PRESSURE<br>DRUCK<br>PRESSION<br>PRESSIONE [bar] | CIRCUIT<br>KREIS 1+2<br>CIRCUIT<br>CIRCUITO | CIRCUIT<br>KREIS 3+4<br>CIRCUIT<br>CIRCUITO |
|---|---|---|
| OPENING PRESSURE :<br>OEFFNUNGSDRUCK : dyn.<br>PRESSION D'OUVERTURE :<br>PRESSIONE DI APERTURA: | $9.0^{0}_{-0.3}$ | $7.5^{0}_{-0.3}$ |
| CLOSING PRESSURE :<br>SCHLIESSDRUCK : dyn.<br>PRESSION DE FERMETURE:<br>PRESSIONE DI CHIUSURA: | ≥ 7.0 | ≥ 4.5 |
| PRESSURE LIMITING<br>DRUCKBEGRENZUNG<br>LIMITATION DE PRESSION<br>LIMITAZIONE DI PRESSIONE | $10^{\pm 0.2}$ | $8.5^{0}_{-0.4}$ |

PRESSURE SENSOR MODULE :
DRUCKSENSORMODUL :
MODULE DE CAPTEUR DE PRESSION :
MODULO DI SENSORE DI PRESSIONE: (S)

MEASURING PRINCIPLE: PIEZO-RESISTIVE
MESSPRINZIP: PIEZORESISTIV
PUINCIPE DE MESURE: PIEZORESISTIF
PRINCIPO DI MISURA: PIEZORESISTIVO

SUPPLY VOLTAGE
SPEISESPANNUNG
TENSION D'ALIMENTATION
TENSIONE D'ALIMENTAZIONE: 5 V DC ±10%

CURRENT CONSUMPTION
STROMAUFNAHME
CONSOMMATION DE COURANT
ASSORBIMENTO DI CORRENTE: MAX. 30mA

THERMAL RANGE OF APPLICATION
THERMISCHER ANWENDUNGSBEREICH: -40°C...+80°C
PLAGE DE TEMPERATURE EN UTILISATION
CAMPO TERMICO DI APPLICAZIONE

MEASURING RANGE : 0-12 bar RELATIVE PRESSURE
MESSBEREICH : 0-12 bar RELATIVDRUCK
ZONE DE MESURE : 0-12 bar PRESSION RELATIVE
CAMPO DI MISURA : 0-12 bar PRESSIONE RELATIVA

ADMISSIBLE OVERPRESSURE
ZULAESSIGER UEBERDRUCK
ADMISSIBLE SURPRESSION
AMMISSIBLE SOVRAPRESSIONE: 16 bar

THE CONNECTION TO ATMOSPHERE MUST LEAD THROUGH WATER-TIGHT CABLING TO A PROTECTED AREA (E.G. IN DRIVERS CAB).
DIE VERBINDUNG ZUR ATMOSPHAERE MUSS UEBER EINE WASSERDICHTE VERKABELUNG ZU EINEM GESCHUETZTEN ORT FUEHREN (Z.B. IM FAHRERHAUS).
LE CONNEXION A L'ATMOSPHERE DOIT PASSER PAR UN CABLAGE ETANCHE A L'EAU A UNE ZONE PROTEGEE (PAR EXAMPLE: LA CABINE DU CONDUCTEUR).
LA CONNESSIONE ALL'ATMOSFERA DEVE PASSARE ATTRAVERSO UN CABLEGGIO STANGO IN UNA ZONA PROTETTA (COME LA CABINA DEL CONDUCENTE).

PORT
ANSCHLUSS
ORIFICE
ORIFIZIO: DIN 72 585

OFFSET:
OFFSET: 1V
DEPLACEMENT DE VALEURS:
DIFFERIMENTO DEL VALORI DI MISURA:

SENSITIVITY
EMPFINDLICHKEIT
SENSIBILITE
SENSIBILITA: 250 mV/bar

LINEARETY
LINEARITAET
LINEARITE
LINEARITA: ≤±0.3%FS

HYSTERESIS
HYSTERESE
HYSTERESIS
ISTERESI: ≤ 0.2%FS

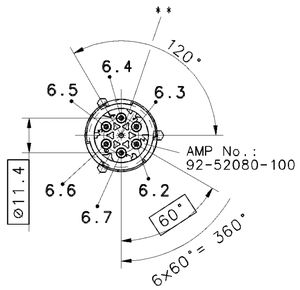


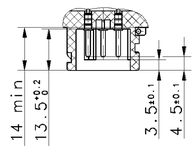


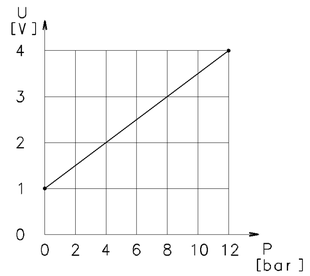


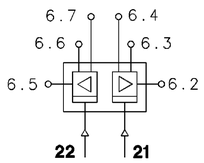


| CIRCUIT<br>KREIS<br>CIRCUIT<br>CIRCUITO | 21 | | | 22 | | |
|---|---|---|---|---|---|---|
| CONTACT<br>KONTAKT<br>CONTACT<br>CONTATTO | 6.2 | 6.3 | 6.4 | 6.5 | 6.6 | 6.7 |
| FUNCTION<br>FUNKTION<br>FONCTION<br>FUNZIONE | OUTPUT<br>AUSGANG<br>SORTIE<br>USCITA | + 5 VDC | - 0V | OUTPUT<br>AUSGANG<br>SORTIE<br>USCITA | + 5 VDC | - 0V |

| GENERAL SPECIFICATION: JED-334 | | | | | | | | |
|---|---|---|---|---|---|---|---|---|
| FURTHER TECHNICAL DATA: | | | | | | | | |
| DOC. CODE: | | | SHEET: | | TO | | | |
| GENERAL TOLERANCES | | | | | | | | |
| CLASS 1) | RANGE OF NOMINAL DIMENSIONS ( ± mm ) | | | | | | | |
| | ≤50 | > 50 ≤180 | >180 ≤400 | >400 | | | | |
| FINE | 0,5 | 1,0 | 1,5 | 2,0 | | | | |
| MEDIUM | 1,0 | 2,0 | 3,0 | 4,0 | ± 3° | 072255 | 2×C | 01-10-29 |
| COARSE | 2,0 | 3,5 | 5,0 | 6,5 | | 072246 | 4×B | 01-05-31 |
| TAPPED HOLES ACC. ISO 4039 / JED-152 | | | | | | 069416 | 3×A | 99-01-08 |
| 1) TOLERANCE CLASS APPLIED CROSSMARKED | | | | | | DCN-NO. | REV. | DATE |

| CADAM-DRAWING COPYRIGHT | | WABCO | |
|---|---|---|---|
| DATE | SIGNATURE | | |
| DRAWN: 97-01-06 | HERZOG | QUADRUPLE CIRCUIT PROTECTION VALVE<br>VIERKREIS-SCHUTZVENTIL<br>VALVE DE PROTECTION (A 4 CIRCUITS)<br>VALVOLA DI PROTEZIONE (A 4 CIRC.) | |
| CHECKED: 97-01-06 | DEIKE | | |
| STANDARDIZATION: | | | |
| MASS 1.65 KG | SCALE 1:1 | PRODUCT IDENTIFICATION NO. 934 705 005 0 | DOC. CODE 605 / SHEET 1/1 |
| SIZE A 1 | I.R.I. 140 | | SHAPE CODE / REPLACEMENT FOR 934 705 001 0 |

100mm

EXPERT CODE 7 4 1

PRODUCT TYPE 0 0 X

TOUTE COMMUNICATION OU REPRODUCTION DE CE DOCUMENT, TOUTE EXPLOITATION OU COMMUNICATION DE SON CONTENU OU REMISE A DES TIERS SONT INTERDITES SAUF AUTORISATION ECRITE. TOUS DROITS DE PROPRIETE INDUSTRIELLE ET DE DROIT D'AUTEUR RESERVES.
NON È PERMESSO CONDIVIDERE A TERZI O RIPRODURRE QUESTO DOCUMENTO, NE UTILIZZARNE IL CONTENUTO O RENDERLO ACCESSIBILE A TERZI SENZA AUTORIZZAZIONE SCRITTA. TUTTI I DIRITTI DI PROPRIETÀ INTELLETTUALE, INCLUSI I DIRITTI DERIVANTI DA BREVETTI E DIRITTI D'AUTORE, SONO RISERVATI.
COPYING OF THIS DOCUMENT AND GIVING IT TO OTHERS AND THE USE OR COMMUNICATION OF THE CONTENTS THEREOF, ARE FORBIDDEN WITHOUT EXPRESS AUTHORITY. OFFENDERS ARE LIABLE TO THE PAYMENT OF DAMAGES. ALL RIGHTS REGISTERED INCLUDING PATENT, UTILITY MODEL OR DESIGN RIGHTS ARE SUBJECT TO COPYRIGHT.