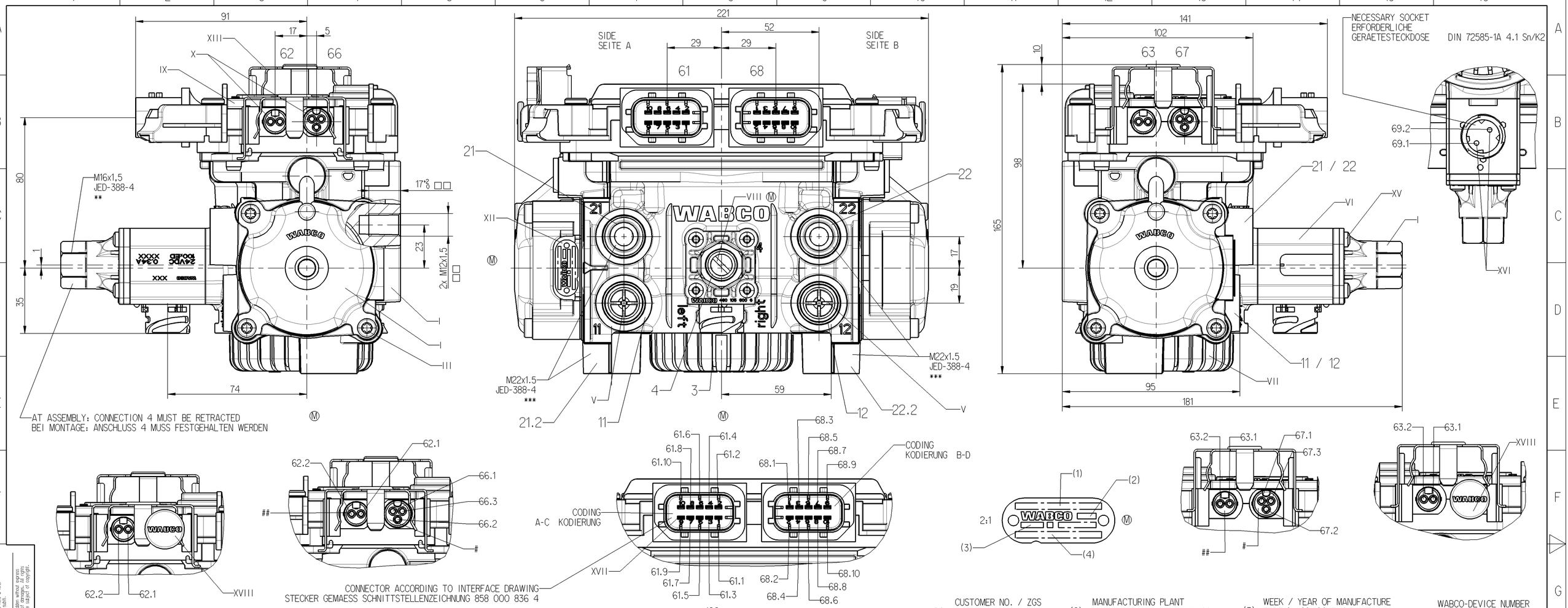

(1)	CUSTOMER NO. / ZGS KUNDEN-NR. kZ / ZGS	
(2)	MANUFACTURING PLANT PRODUKTIONSSTAETTE JED-225	
(3)	WEEK / YEAR OF MANUFACTURE FERTIGUNGSWOCHE / -JAHR	
(4)	WABCO-DEVICE NUMBER WABCO-GERAETE NUMMER	

	MATERIAL MATERIAL		SURFACE PROTECTION OBERFLAECHENSCHUTZ			MATERIAL MATERIAL			SURFACE PROTECTION OBERFLAECHENSCHUTZ	
I	Al	JED-029M1	C	JED-259		X	CuZn	JED-570-865	Ag	
II	Fe	JED-051M4	Zn / C	JED-256-4		XI				
III	Fe	JED-051M4	Zn / Al	JED-378-1		XII	Al	JED-077-1	□	JED-007-1
IV	Al	JED-019M	C	JED-259		XIII	Fe	Fe JED-050MO		
V	Pa 6.6-GF25 + Pa 6.6	JED-483 + JED-484				XIV				
VI	Pa 6.6 GF	JED-559				XV	Fe	JED-051M4	Zn/C	JED-256-4
VII	Pa 6.6	JED-354-1				XVI	CuZn	JED-570-616	Zn	
VIII	Pa 6 + Pa 6.6	JED-557/JED-354+JED-484				XVII	Cu	Cu	Ag	
IX	PBT-GF30	JED-352-9				XVIII	Pa 6.6-GF30	JED-426-1		

□□	M12 x 1,5			
TORQUE ANZUGSMOMENT	max. 110 Nm	max. 70 Nm	max. 65 Nm	max. 60 Nm
LENGTH OF ENGAGEMENT EINSCHRAUBLAENGE	17 mm	15 mm	12 mm	10 mm

	**	***
TORQUE ACCORDING TO JED-366 ANZUGSMOMENT ENTSPRECHEND JED-366	M16	M22
FOR THREAD PERMISSIBLE FUER GEWINDE ZULAESSIG	max. 34 Nm	max. 53 Nm

□ ANODIC OXIDATION
ANODISCHE OXIDATION

NECESSARY SOCKET
ERFORDERLICHE GERAETESTECKDOSE 441 901 316 2

NECESSARY SOCKET
ERFORDERLICHE GERAETESTECKDOSE 441 901 314 2

General Specification: JED-334-0					
Further Technical Data: 480 105 000 0					
Doc. Code: 035		Sheet: 1 To 61			
General Tolerances JED-261					
Range of Nominal Dimensions (± mm)					
Class 1)	≤ 50	> 50 ≤ 180	> 180 ≤ 400	> 400	∢
Fine	0.5	1.0	1.5	2.0	±3°
Medium X	1.0	2.0	3.0	4.0	
Coarse	2.0	3.5	5.0	6.5	
Tapped Holes acc. -					
1) Tolerance Class Applied Crossmarked					

Copyright WABCO®

Date	Signature
Drawn 2013-03-07	Otte
Checked 2013-03-07	Schappler
Expert Didwiszus	

WABCO

EBS AXLE MODULATOR
EBS-ACHSMODULATOR AM3

Mass	Scale	Material No.	Date of first issue: 2005-05-13		
3:2 KG	1:1 (2:1)	480 105 000 0	Doc.Code 053	Language DE	Sheet 1/3
Size A 1	CAD System Pro/E	ECN-No. 160800 / Revision 6 x M / Techn. Resp. 6840	Replacement for 884 017 590 0		

100mm

Tout Communication ou reproduction de ce document, toute exploitation ou communication de son contenu sont interdites, sauf autorisation expresse. Tout manquement à cette règle constitue un délit, expose son auteur au versement de dommages et peut entraîner des poursuites.

Weitergabe sowie Vervielfältigung dieser Unterlage, Verwertung und Mitteilung ihres Inhalts nicht gestattet, soweit nicht durdrücklich zugestanden. Zuwiderhandlungen stehen ohneausdrückliche Weiterverfolgung der Schadensersatz verpflichtet.

Non è permesso consegnare o terzi o riprodurre questo documento, né utilizzarne il contenuto o renderlo comunque noto a terzi senza autorizzazione espressa. Qgni infrazione costituisce un reato, obbliga il responsabile al risarcimento dei danni e comporta il rischio di azioni legali.

Copying of this document and giving it to others and the use or communication of the contents thereof, are forbidden without express authority. Contravention of this restriction will constitute an incident offence and result in a liability to the payment of damages, all rights are reserved in the event of the grant of a patent or registration of a utility model or design. Offenders will be prosecuted.