THE VALVE CORRESPONDS TO THE REGULATIONS FOR ELECTROMAGNETIC DEVICES ACCORDING TO VDE 0580
DAS GERAET ENTSPRICHT DEN BESTIMMUNGEN FUER ELEKTROMAGNETISCHE GERAETE NACH VDE 0580
LE VALVE CORRESPOND AUX CONDITIONS POUR DES APPAREILS ELECTROMAGNETIQUES SUIVANT VDE 0580
LA VALVOLA CORRISPONDE ALLE CONDIZIONI PER APPARECCHI ELETTROMAGNETICHI SECONDO VDE 0580

MEDIUM : AIR
MEDIUM : LUFT
FLUIDE : AIR
FLUIDO : ARIA

VOLTAGE :
SPANNUNG :
VOLTAGE :
VOLTAGGIO : $24^{+8}_{-6.5}$ V DC

WORKING PRESSURE :
BETRIEBSDRUCK :
PRESSION D'UTILISATION :
PRESSION DI ESERCIZIO : p_e = 1.....11 bar

NOMINAL CURRENT :
NENNSTROM :
COURANT NOMINAL :
CORRENTE NOMINALE : 0.41 A

PERMISSIBLE PRESSURE :
ZULAESSIGER DRUCK :
PRESSION ADMISSIBLE :
PRESSIONE AMMISIBILE : $p_e \leq 12.5$ bar

NOMINAL DIAMETER SUPPLY ø2.2mm , EXHAUST ø3mm
NENNWEITE BELUEFTUNG ø2.2mm , ENTLUEFTUNG ø3mm
DIAMETRE NOMINAL ALIMENTATION ø2.2mm , ECHAPPEMENT ø3mm
DIAMETRO NOMINALE ALIMENTAZIONE ø2.2mm , SCARICO ø3mm

RELATIVE DUTY CYCLE :
RELATIVE EINSCHALTDAUER:
PLAGE DE UTILISATION :
DURATE DELL'INSERIMENTO: 100% ED

THERMAL RANGE OF APPLICATION :
THERMISCHER ANWENDUNGSBEREICH :
PLAGE THERMIQUE D'APPLICATION :
CAMPO DI APPLICAZIONE TERMICA : -40°C....+100°C

PROTECTION CLASS :
SCHUTZKLASSE :
CLASSE DE PROTECTION :
CLASSE DI PROTEZIONE : III

TYPE OF PROTECTION :
SCHUTZART :
MODE DE PROTECTION :
TIPO DI PROTEZIONE :

IP 6K6 AND / UND / ET / E IP 6K9K (B) — WITH SEALED CONNECTIONS 1,2,6
MIT ABGEDICHTETEN ANSCHLUESSEN 1,2,6
AVEC CONNEXIONS ETANCHEES 1,2,6
CON CONNESSIONI SIGILLATI 1,2,6

IP 6K7 (JED-370) — WITH SEALED CONNECTIONS 1,2,3,6
MIT ABGEDICHTETEN ANSCHLUESSEN 1,2,3,6
AVEC CONNEXIONS ETANCHEES 1,2,3,6
CON CONNESSIONI SIGILLATI 1,2,3,6

POSITION OF INSTALLATION : OPTIONAL
EINBAULAGE : BELIEBIG
POSITION D'INSTALLATION : AU CHOIX
POSIZIONE DI MONTAGGIO : A PIACERE

1 SUPPLY
ENERGIEZUFLUSS VOM VORRAT
ALIMENTATION
ALIMENTAZIONE

2 DELIVERY
ENERGIEABFLUSS IN DIE ARBEITSLEITUNG
UTILISATION
MANDATA

VOLTAGE PEAKS ON BREAKING
ABSCHALTSPANNUNGSSPITZEN
VOLTAGE DE POINTE ALLA RUPTURE
VOLTAGGI DELLE PUNTE ALLA ROTTURA < 65 V

3 EXHAUST
ANSCHLUSS ATMOSPHAERE
ECHAPPEMENT
SCARICO

6 ELECTRIC TERMINAL
ELEKTRISCHER ANSCHLUSS
BORNE ELECTRIQUE
MORSETTI ELETTRICI

(B) PLUG CONNECTION :
STECKVERBINDUNG :
CONNEXION A FICHE : DIN 72 585-A1-3.2-Sn/K1
COLLEGAMENTO A SPINA :

* NOT SUPPLIED
NICHT IM LIEFERUMFANG
NON FUORNI
NON SI FORNISCONO

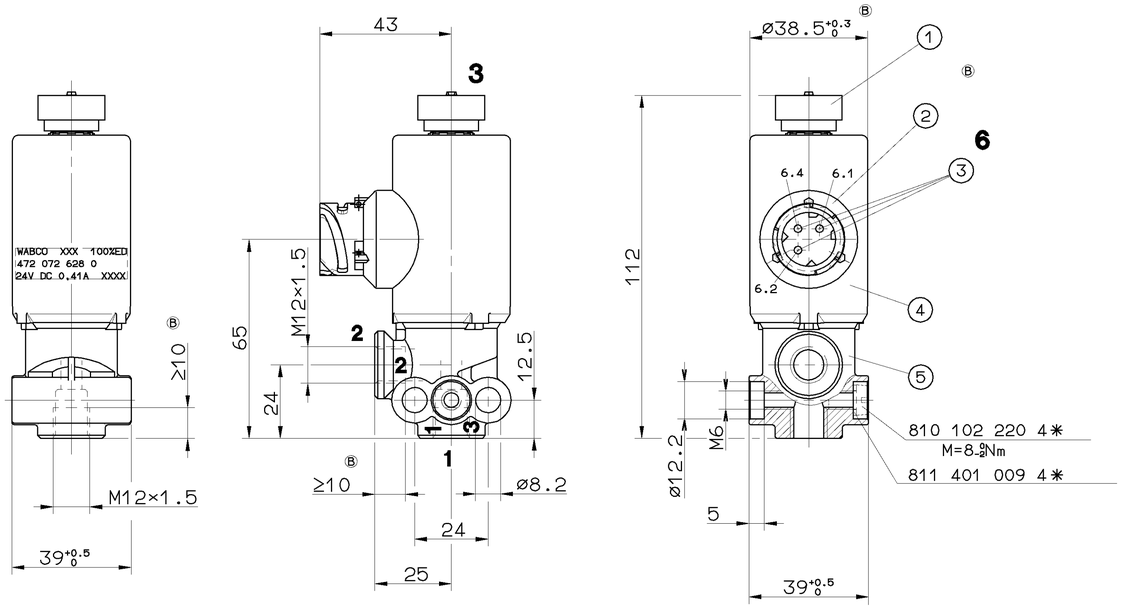

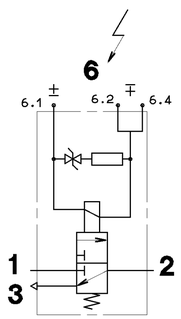

(B)

	MATERIAL/SURFACE PROTECTION WERKSTOFF/OBERFLAECHENSCHUTZ MATIERE/PROTECTION DE SURFACE MATERIALE/PROTEZIONE SUPERFICIALE
1	JED-354.1
2	JED-559
3	JED-570.616
4	JED-303/JED-739
5	JED-004M/JED-260

GENERAL SPECIFICATION: JED-334		
FURTHER TECHNICAL DATA:		
DOC. CODE:	SHEET:	TO

GENERAL TOLERANCES

CLASS 1)	RANGE OF NOMINAL DIMENSIONS (± mm) ≤50	>50 ≤180	>180 ≤400	>400	
FINE	0,5	1,0	1,5	2,0	
MEDIUM ×	1,0	2,0	3,0	4,0	± 3°
COARSE	2,0	3,5	5,0	6,5	

TAPPED HOLES ACC. ISO 4039 / JED-162

1) TOLERANCE CLASS APPLIED CROSSMARKED

DCN-NO.	REV.	DATE
056599	7xB	95-08-08
054811	9xA	94-04-21

100mm

CADAM-DRAWING COPYRIGHT

DATE	SIGNATURE
DRAWN: 94-02-01	WEBER
CHECKED: 94-02-01	TEICHMANN
STANDARDIZATION: 94-02-02	PANTZER

WABCO

3/2 SOLENOID VALVE
3/2 MAGNETVENTIL
ELECTROVANNE 3/2
ELETTROVALVOLA 3/2

MASS	SCALE	PRODUCT IDENTIFICATION NO.	DOC. CODE	SHEET
≈0.5 KG	1:1	472 072 628 0	605	1/1
SIZE A 1	T.R.I. 142	SHAPE CODE	REPLACEMENT FOR 884 009 242 0	

EXPERT CODE 7 2 6

PRODUCT TYPE 9 2 X

TOUTE COMMUNICATION OU REPRODUCTION DE CE DOCUMENT, TOUTE EXPLOITATION OU COMMUNICATION DE SON CONTENU NON E PERMESSO CONSEGNARE A TERZI O DIFFONDERE QUESTO DOCUMENTO, NE UTILIZZARE IL CONTENUTO O RIVELARNE IL CONTENUTO PER SCOPI ALTRI CHE QUELLI AUTORIZZATI. IN CASO DI CONCESSIONE DI BREVETTO O DI REGISTRAZIONE DI UN MODELLO DI DISEGNO O DI MODELLO DI UTILITÀ, VIOLAZIONE DA PARTE DI TERZI.
DURCH ERTEILUNG VON PATENT ODER EINTRAGUNG EINES GebrauchsmusterS Oder EINES GeschmacksmusterS VERSTOßen DRITTER.
NOT TO BE DISTRIBUTED OR REPRODUCED, NOR TO BE MADE USE OF OR DISCLOSED TO OTHERS WITHOUT WRITTEN PERMISSION. IN CASE OF GRANT OF A PATENT OR REGISTRATION OF A UTILITY MODEL OR DESIGN/MODEL, VIOLATION BY THIRD PARTIES.
THIS DOCUMENT IS THE SUBJECT OF COPYRIGHT.