	MATERIAL	SURFACE PROTECTION
I	POM	
II	EPDM	
III	STEEL	Zn
IV	STEEL	Zn
V	BRASS	
VI	STEEL	Zn
VII	STEEL	Zn
VIII	POM	

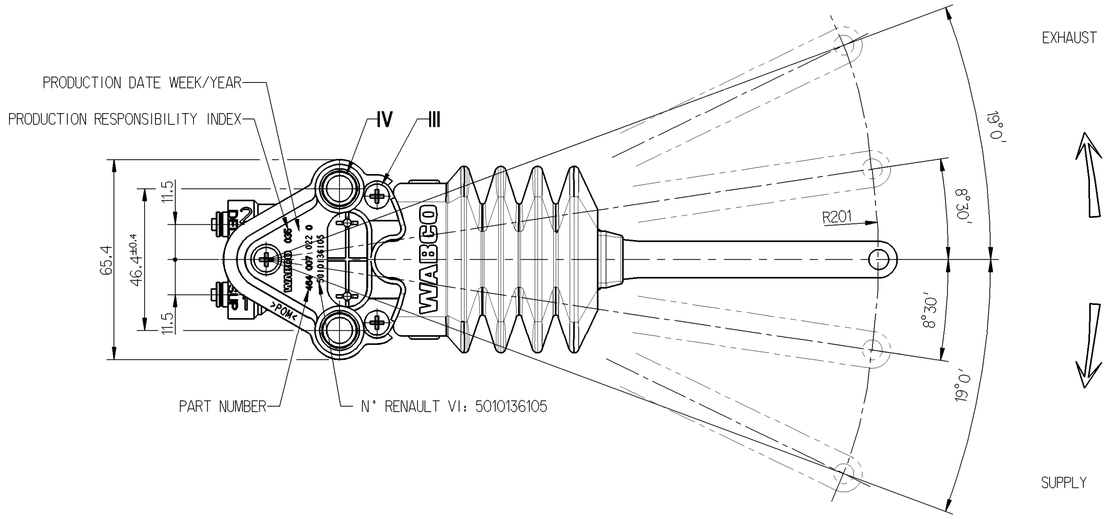

FLOW RATE FOR : P1=8 bar and P1=11 bar

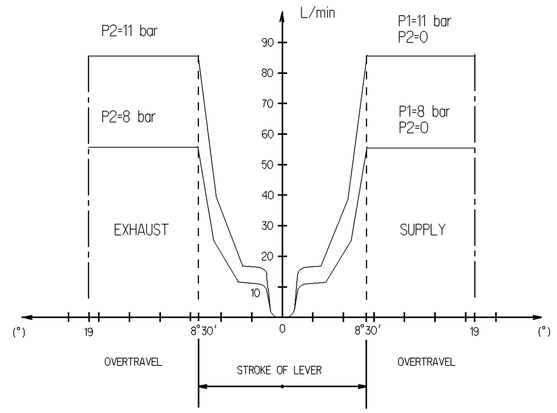

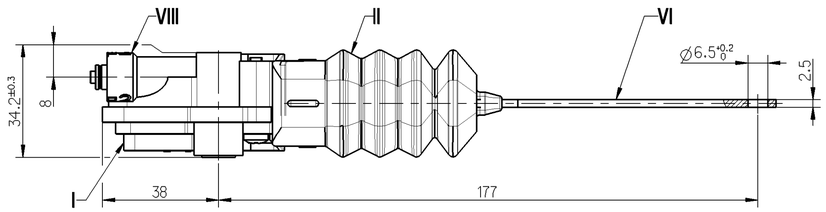

1 SUPPLY	
2 DELIVERY	
THERMAL RANGE	-40°C ... +80°C
WORKING PRESSURE	P1= 11 bar MAX.
EXCEPTIONAL INLET PRESSURE	P1= 14 bar MAX.
RESIDUAL PRESSURE	P2= 0.6±0.3 bar

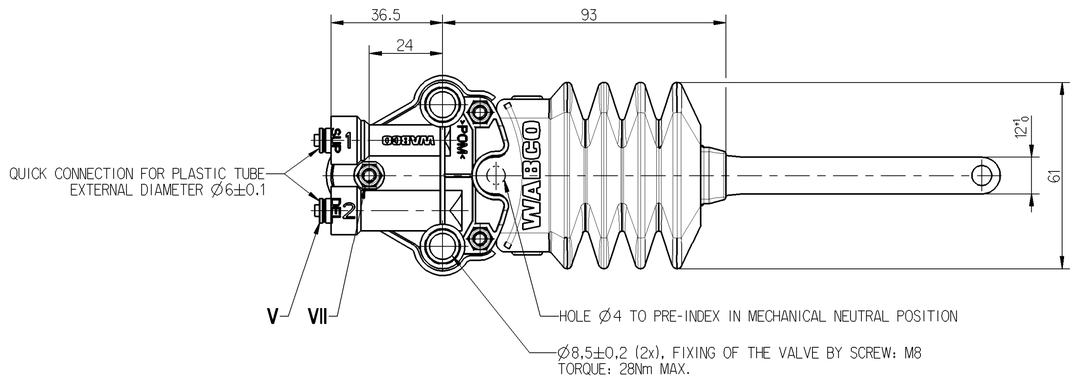

SYMBOL

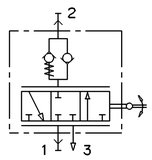

General Specification: JED-334-0 , Size ISO 14405-1 E					
Further Technical Data:					
Doc. Code:		Sheet:		To	
General Tolerances JED-261					
Class 1)	Range of Nominal Dimensions (± mm) ≤ 50	> 50 ≤ 180	> 180 ≤ 400	> 400	∢
Fine	0.5	1.0	1.5	2.0	±3°
Medium	1.0	2.0	3.0	4.0	
Coarse	2.0	3.5	5.0	6.5	
Tapped Holes acc.					
1) Tolerance Class Applied Crossmarked					

Copyright WABCO®

Date	Signature
Drawn 2012-10-25	Repela
Checked 2012-10-31	Harla
Expert Repela	

WABCO

LEVELLING VALVE

Mass	Scale	Material No.	Date of first issue		
0.216 KG	1:1	464 007 022 0	Doc.Code 005	Language EN	Sheet 1/1
Size A 1	CAD System Pro/E	ECN-No. 157839	Revision B	Techn. Resp. 5642	Replacement for

100mm

Toute Communication ou reproduction de ce document, toute exploitation ou communication de son contenu sont interdites, sauf autorisation expresse. Tout manquement à cette règle constitue un délit d'édition et expose son auteur au versement de dommages et intérêts. Tous droits réservés, en particulier droits de brevet et de dépôt de modèle d'utilité.

Weitergabe sowie Vervielfältigung dieser Unterlage, Verwertung und Mitteilung ihres Inhalts nicht gestattet, soweit nicht ausdrücklich zugestanden. Zuwiderhandlungen ziehen einen strafrechtlichen Mindestbetrag an Schadensersatz nach sich. Alle Rechte für den Fall der Patenterteilung oder Gebrauchsmustereintragung vorbehalten.

Non è permesso consegnare o farci o riprodurre questo documento, né utilizzare il contenuto o renderlo comunque noto a terzi. Il mancato rispetto di tale prescrizione costituisce reato. Ogni infrazione comporta un indennità di danni e comporta il risarcimento dei danni subiti. Tutti i diritti sono riservati, in particolare diritti di brevetto e di registrazione di modello di utilità.

Copying of this document and giving it to others and the use or communication of the contents thereof, are forbidden without express authority. Offenders of this restriction will constitute an evident abuse and result in a liability to the payment of damages. All rights are reserved in the event of the grant of patent or registration of a utility model or design. This document is the subject of copyright.