| | MATERIAL MATIERE | SURFACE PROTECTION PROTECTION DE SURFACE |
|---|---|---|
| I | JED 005M0 BLACK | |
| II | EPDM | |
| III | STEEL/ACIER | JED 256 |
| III | STEEL/ACIER | JED 739.1 |

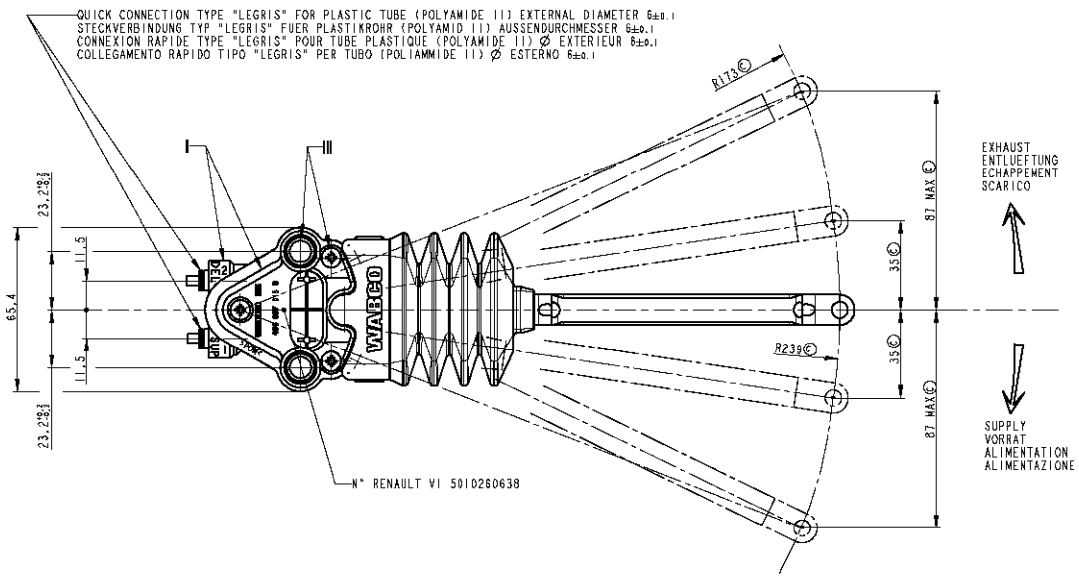


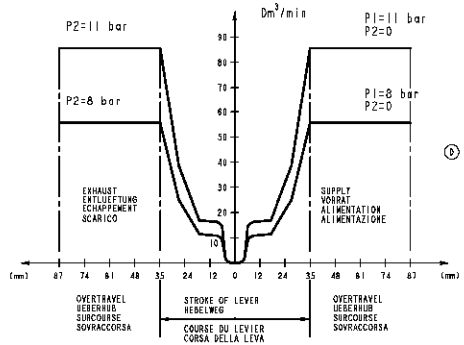


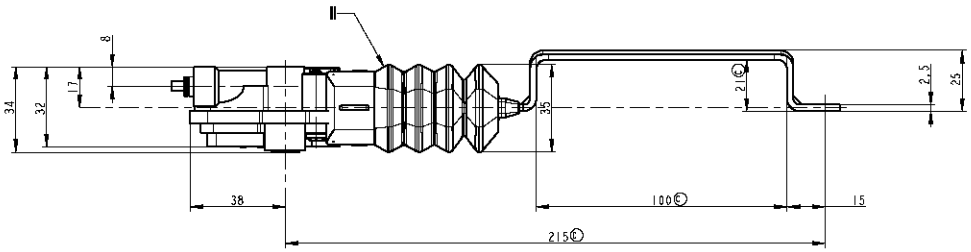


| | |
|---|---|
| 1 | SUPPLY<br>VORRAT<br>ALIMENTATION<br>ALIMENTAZIONE |
| 2 | DELIVERY<br>AUSGANG<br>UTILISATION<br>UTILIZZAZIONE |

| | |
|---|---|
| THERMAL RANGE<br>THERM. ANWENDUNGSBEREICH<br>TEMPERATURE D'UTILISATION<br>TEMPERATURA DI UTILIZZAZIONE | -40°C ... +100° C |
| SUPPLY PRESSURE<br>VORRATSDRUCK<br>PRESSION PNEUMATIQUE D'ALIMENTATION<br>PRESSION PNEUMATICA DI ALIMENTAZIONE | PI= 11 bar MAX. |
| EXCEPTIONAL INLET PRESSURE<br>EINGESTEUERTER DRUCK.KURZZEITIG<br>PRESSION D'ALIMENTATION EXCEPTIONNELLE<br>PRESSIONE DI ALIMENTAZIONE ECCEZIONALE | PI=12 bar |
| CHECK VALVE ON DELIVERY FOR<br>RUECKSCHLAGVENTIL AM ENERGIE ABFLUSS FUER<br>CLAPET DE RETENUE SUR UTILISATION POUR<br>VALVOLA DI RITENUTA SULL'UTILIZZAZIONE PER | P2=0.6±0.3 bar |

SYMBOL
SYMBOL
SYMBOLE
SYMBOLO

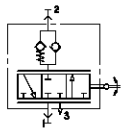


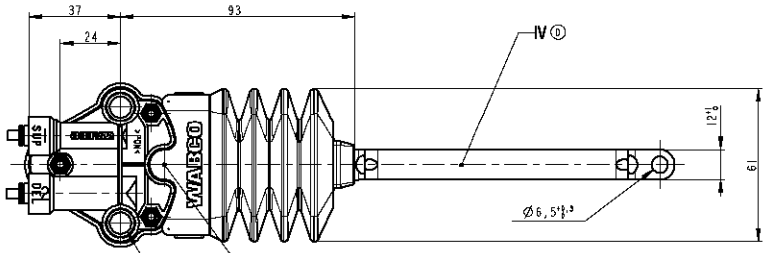


HOLE Ø4 TO PRE-INDEX IN MECHANICAL NEUTRAL POSITION

TROU Ø4 POUR PRE-INDEXER EN POSITION NEUTRE MECANIQUE

FIXING OF THE VALVE BY SCREW M8 — TORQUE 18±6Nm

(2X) Ø8.5 ±0.2 FIXATION DE L'APPAREIL PAR VIS M8 — COUPLE DE SERRAGE 18±6Nm

Ⓑ I x <> : Special Characteristics
Caractéristiques Spéciales

| | | | | | | | |
|---|---|---|---|---|---|---|---|
| FURTHER TECHNICAL DATA SEE | | | | | - | L | - |
| IDENTIFICATION NO.: | | | | | - | K | - |
| CODE FOR DOCUMENT: 605 | SHEET: | TO | | | - | J | - |
| GENERAL TOLERANCES | | | | | - | H | - |
| CLASS | RANGE OF NOMINAL DIMENSIONS (± mm) | | | | - | G | - |
| | 11 | < 50 | > 50 <180 | > 180 < 400 | > 400 | - | F | - |
| I | | 0.5 | 1.0 | 1.5 | 2.0 | | E | |
| II | | 1.0 | 2.0 | 3.0 | 4.0 | 147/01 | 5 a D | 03/05/01 |
| III | | 2.0 | 3.0 | 5.0 | 6.5 | 00410/00 | 10 a C | 11/10/00 |
| TAPPED HOLES ACC. ISO 4026 / JED-152 | | | | | | - | B | - |
| II TOLERANCE CLASS APPLIED CROSSHATCHED | | | | | | - | A | - |
| | | | | | | DCN-NO. | REV. | DATE |

COPYRIGHT

| DATE | SIGNATURE |
|---|---|
| DRAWN 25/11/99 | CABIRO |
| CHECKED 25/11/99 | CABIRO |
| STANDARDIZATION 11/10/00 | 00410/00 |

WABCO

LEVELLING VALVE
LUFTEDERVENTIL
VALVE NIVELLEMENT
VALVOLA LIVELLATRICE

| MASS | SCALE | PRODUCT IDENTIFICATION NO. | CODE FOR DOCUMENT | SHEET |
|---|---|---|---|---|
| 0.26 kg | 1/1 | 464 007 015 0 | 605 | 1/1 |
| SIZE | A.R. | CODE F.PROD.-SERVIC | CODE FOR SHAPE | REPLACEMENT FOR |
| A 1 | 210 | - | - | © 464 007 015 0 B |

EXPERT CODE — TYPE OF PRODUCT

PART NAME: 464007015
DOCUMENT NAME: 9440070152-605