	MATERIAL MATIERE	SURFACE PROTECTION PROTECTION DE SURFACE
I	JED 005M0 BLACK	
II	EPDM	
III	STEEL/ACIER	JED 256
IV	STEEL/ACIER	JED 739.1

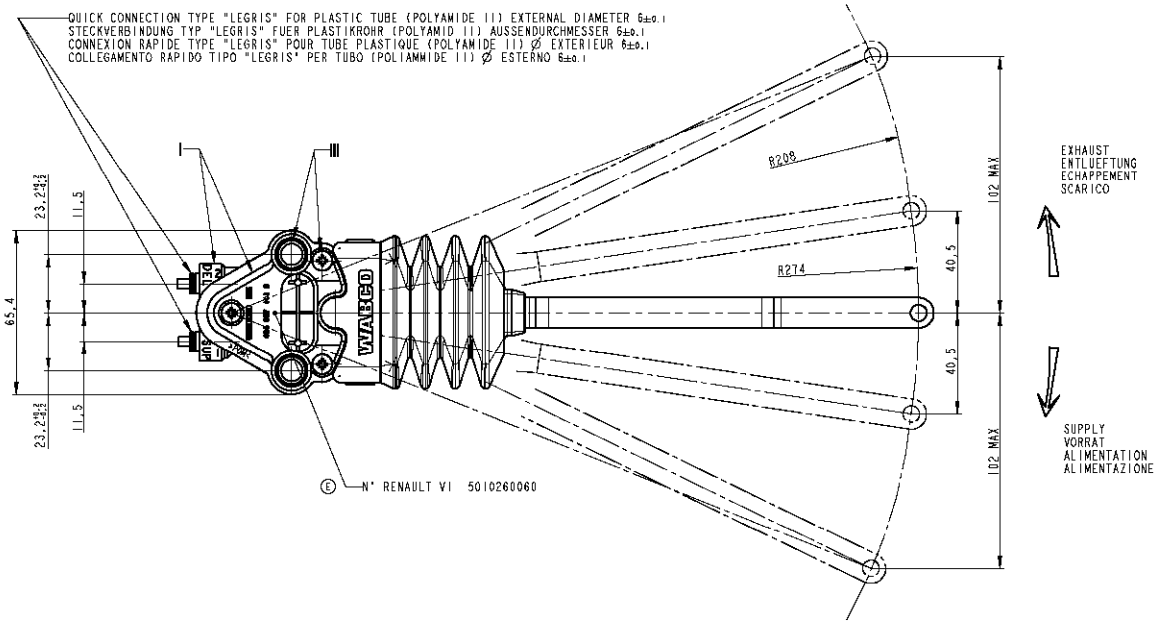

FLOW RATE FOR : P1 = 8 bar
DURCHFLUSS BEI : and / et
(E) [3] <2> CARACTERISTIQUE DE DEBIT POUR : P1 = 11 bar
(F) CARATTERISTICHE DI PORTATA PER :

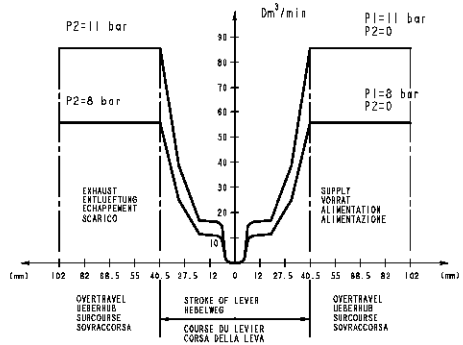

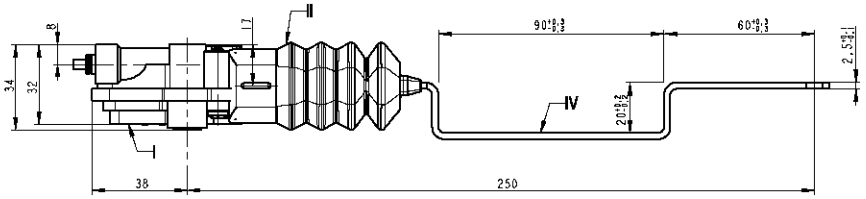

1	SUPPLY VORRAT ALIMENTATION ALIMENTAZIONE
2	DELIVERY AUSGANG UTILISATION UTILIZZAZIONE

THERMAL RANGE THERM. ANWENDUNGSBEREICH TEMPERATURE D'UTILISATION TEMPERATURA DI UTILIZZAZIONE	-40°C ... +100° C
SUPPLY PRESSURE VORRATSDRUCK PRESSION PNEUMATIQUE D'ALIMENTATION PRESSION PNEUMATICA DI ALIMENTAZIONE	P1= 11 bar MAX.
EXCEPTIONAL INLET PRESSURE EINGESTEUERTER DRUCK.KURZZEITIG PRESSION D'ALIMENTATION EXCEPTIONNELLE PRESSIONE DI ALIMENTAZIONE ECCEZIONALE	P1=12 bar
CHECK VALVE ON DELIVERY FOR RUECKSCHLAGVENTIL AM ENERGIE ABFLUSS FUER CLAPET DE RETENUE SUR UTILISATION POUR VALVOLA DI RITENUTA SULL'UTILIZZAZIONE PER	P2=0.6±0.3 bar

SYMBOL
SYMBOL
SYMBOLE
SYMBOLO

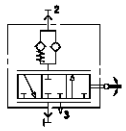

(E) I x <> : Special Characteristics
Caractéristiques Spéciales

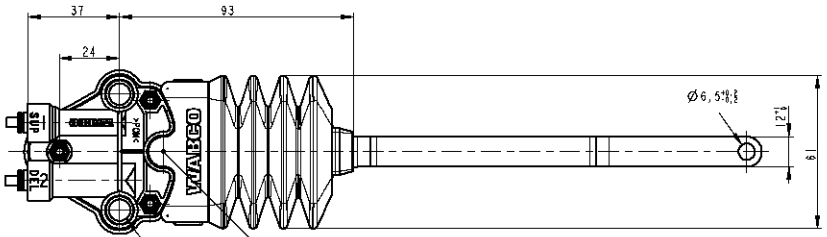

HOLE Ø4 TO PRE-INDEX IN MECHANICAL NEUTRAL POSITION
-
TROU Ø4 POUR PRE-INDEXER EN POSITION NEUTRE MECANIQUE
-

FIXING OF THE VALVE BY SCREW M8 TORQUE 18±6Nm
-
(2X) Ø8.5 ±0.2 FIXATION DE L'APPAREIL PAR VIS M8 COUPLE DE SERRAGE 18±6Nm
-

FURTHER TECHNICAL DATA SEE				-	L	-
IDENTIFICATION NO.:				-	K	-
CODE FOR DOCUMENT: 605	SHEET:	TO		-	J	-
GENERAL TOLERANCES				-	H	-
CLASS	RANGE OF NOMINAL DIMENSIONS (± mm)			-	G	-
	17	< 50	> 50 <180	> 180 < 400	> 400	147/01	1 x F	03/05/01
						019/01	4 x E	22/01/01
I		0,5	1,0	1,5	2,0	-	D	-
II		1,0	2,0	3,0	4,0	± 5°	-	C	-
III		2,0	3,0	5,0	6,5		-	B	-
TAPPED HOLES ACC. ISO 4026 / JED-152							-	A	-
II TOLERANCE CLASS APPLIED CROSSHATCHED							DCN-NO.	REV.	DATE

COPYRIGHT

DATE	SIGNATURE
DRAWN 22/01/01	LEVECQUE
CHECKED 22/01/01	CABIRO
STANDARDIZATION 22/01/01	019/01

MASS	SCALE
0.24 kg	1/1
SIZE	A.R.
A 1	210

WABCO

LEVELLING VALVE
LUFTEDERVENTIL
VALVE NIVELLEMENT
VALVOLA LIVELLATRICE

PRODUCT IDENTIFICATION NO.: 464 007 008 0

CODE FOR DOCUMENT: 605 SHEET: 1/1

CODE F.PROD.-SERVICE - CODE FOR SHAPE - REPLACEMENT FOR (E) 464 007 008 0 0

EXPERT CODE TYPE OF PRODUCT

DOCUMENT NAME: 9449170105-105

PART NAME: 4449170085

44-01