F (MAX. ADMISSIBLE / ZULAESSIG / ADMISE / AMMISSIBILE 10000 N)

** ALL ROUND / ALLSEITIG / UNIVERSAL / SU CIASCUN LATO MAX.5°

*** SPHERE / KUGEL / SPHERE / SFERA Ø8 0 -0.3

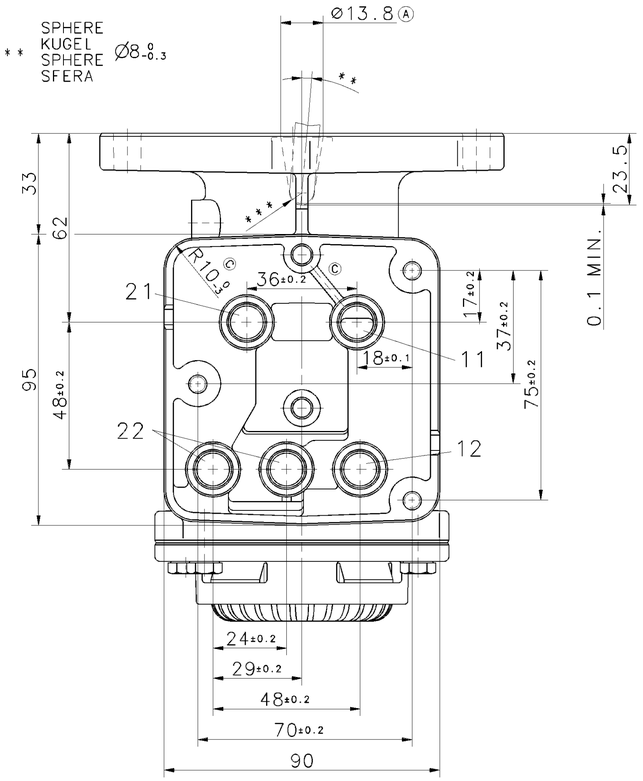

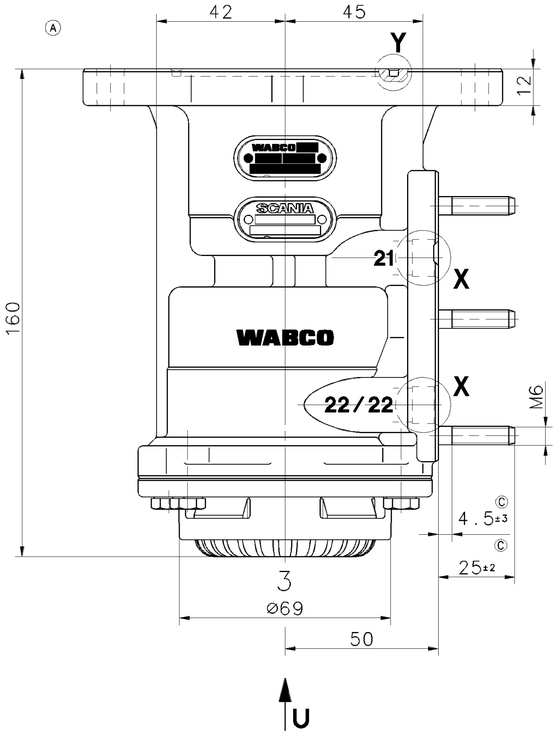

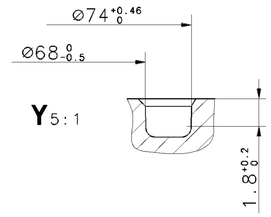

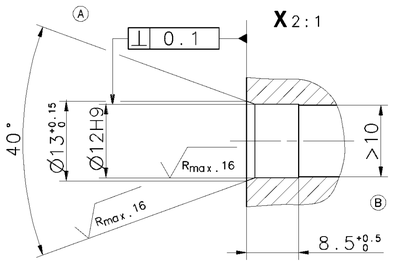

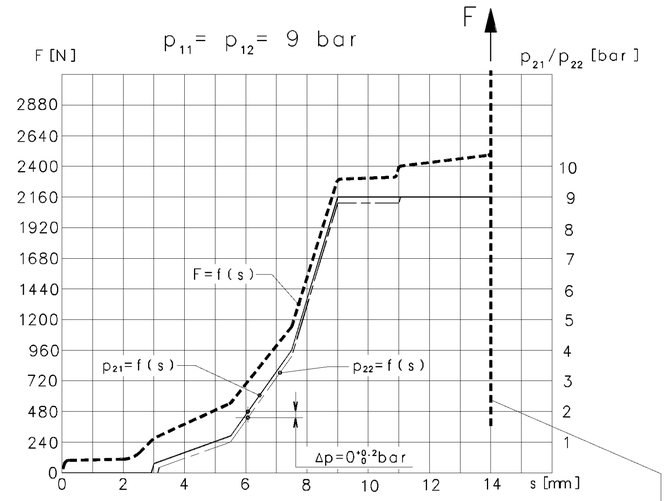

AT FAILURE CIRCUIT 1 : NECESSARY COURSE S ≥ 14 mm
NECESSARY FORCE F = 3750 N
BEI AUSFALL KREIS 1 : ERFORDERLICHER WEG S ≥ 14 mm
ERFORDERLICHE KRAFT F = 3750 N *
EN CAS DE DEFAILANCE : COURSE NECESSARIA S ≥ 14 mm
CIRCUIT 1 FORCE NECESSARIA F = 3750 N
IN CASO DI DIFETTO : CORSA NECESSARIA S ≥ 14 mm
CIRCUITI 1 FORZA NECESSARIA F = 3750 N

* STOP WITHIN THE DEVICE ADMISSIBLE
ANSCHLAG IM GERAET ZULAESSIG
BUTEE DANS L APPARAIL ADMISE
ARRESTO NEL APPARATO AMMISSIBILE

11/12	SUPPLY / VORRAT / ALIMENTATION / ALIMENTAZIONE	21/22	OUTLET / AUSGANG / SORTIE / USCITA	3	EXHAUST / ENTLUEFTUNG / ECHAPPEMENT / SCARICO

MEDIUM: AIR
MEDIUM: LUFT
FLUIDE: AIR
FLUIDO: ARIA

NOMINAL DIAMETER:
NENNWEITE:
DIAMETRE NOMINAL:
DIAMETRO NOMINALE: 78.5mm² ≅ Ø10mm

WORKING PRESSURE:
BETRIEBSDRUCK:
PRESSION D UTILISATION: p_e=MAX. 9 bar
PRESSIONE DI ESERCIZIO:

(TEMPORARILY:
(KURZZEITIG:
(DE COURTE DUREE: p_e=MAX. 11 bar)
(BREVE TEMPO SOLO:

THERMAL RANGE OF APPLICATION:
THERM. ANWENDUNGSBEREICH:
GAMME D APPLICATION THERMIQUE:
CAMPO DI APPLICAZIONE TERMICA: -40°C...+80°C

INSTALLATION POSITION: EXHAUST SHOWN AT BASE (AXIS CENTRE OF THE DEVICE DEVIATES MAX. 90° FROM VERTICAL) Ⓐ
EINBAULAGE: ENTLUEFTUNG NACH UNTEN (MITTELACHSE DES GERAETES MAX. 90° VON DER SENKRECHTEN ABWEICHEND)
POSITION D' INSTALLATION: ECHAPPEMENT VERS LE BAS (ECART DE L' AXE MEDIAN DE L' APPAREIL PAR RAPPORT A LA VERTICALE: 90° MAX.)
POSIZIONE DI MONTAGGIO: SCARICO VERSO IL BASSO (DEVIAZIONE ASSE APPARECCHIO RISPETTO ALLA VERTICALE: MAX. 90°)

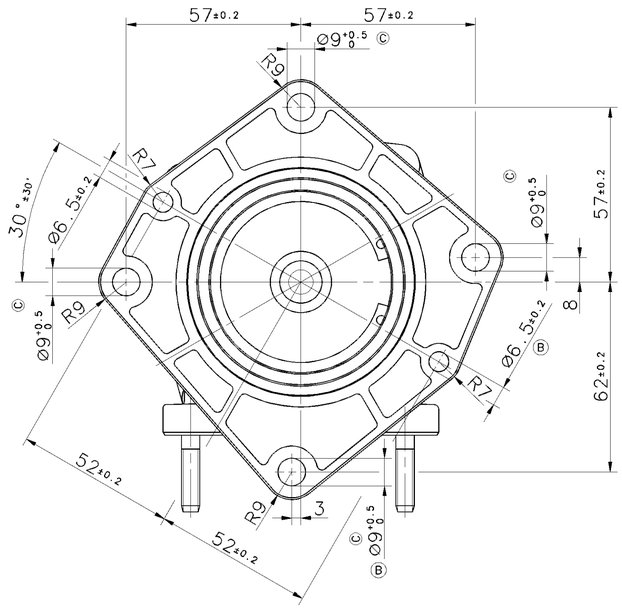

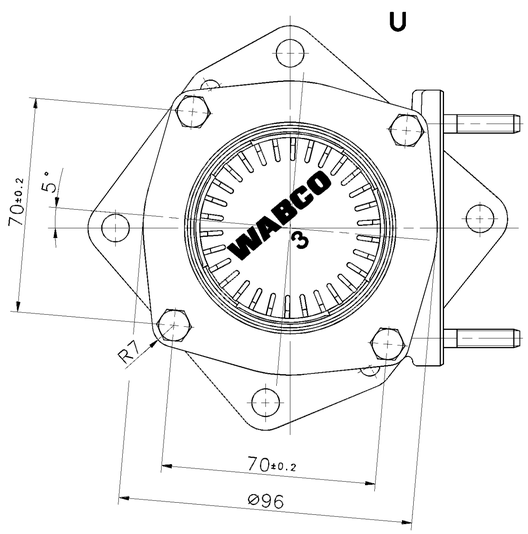

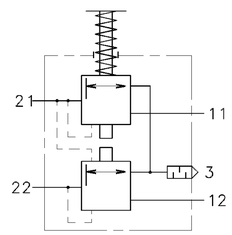

GENERAL SPECIFICATION: JED-334							
FURTHER TECHNICAL DATA:							
DOC. CODE:	SHEET: TO						
GENERAL TOLERANCES							
CLASS 1)	RANGE OF NOMINAL DIMENSIONS (± mm) ≤50	> 50 ≤180	>180 ≤400	>400			
FINE	0,5	1,0	1,5	2,0			
MEDIUM X	1,0	2,0	3,0	4,0	± 3°	083203	8xC 02-03-06
COARSE	2,0	3,5	5,0	6,5		057264	3xB 96-10-08
TAPPED HOLES ACC. ISO XXXXXXXXXXXXXXXX						057258	4xA 96-07-23
1) TOLERANCE CLASS APPLIED CROSSMARKED						DCN-NO.	REV. DATE

CADAM-DRAWING COPYRIGHT
DATE SIGNATURE
DRAWN: 96-01-09 GIESEKE
CHECKED: 96-01-09 GROETZ.
STANDARDIZATION:

WABCO

BRAKE VALVE
MOTORWAGEN-BREMSVENTIL
ROBINET DE FREINAGE
DISTRIBUTORE DI COMANDO

MASS	SCALE	PRODUCT IDENTIFICATION NO.	DOC. CODE	SHEET
KG	1:1 (2:1;5:1)	461 315 180 0	605	1/1
SIZE	I.R.I.			
A 1	140		SHAPE CODE	REPLACEMENT FOR 884 010 079 0

100mm

EXPERT CODE 7 3 6

PRODUCT TYPE 0 0 X

TOUTE COMMUNICATION OU REPRODUCTION DE CE DOCUMENT, TOUTE EXPLOITATION OU COMMUNICATION DE SON CONTENU OU RENSEIGNEMENTS SUR LA NATURE OU LA MISE EN ŒUVRE DE CE DOCUMENT SONT INTERDITES SAUF AUTORISATION ECRITE. TOUS DROITS DE PROPRIETE INTELLECTUELLE SUR CE DOCUMENT RESERVES.
NICHT GESTATTET SIND WEITERGABE UND VERVIELFÄLTIGUNG DIESES DOKUMENTS, SOWIE DER GENUSS UND MITTEILUNG ihres INHALTS NICHT WELCHER ART SOWIE DER VERWERTUNG SEINER ANGABEN. ZUWIDERHANDLUNGEN VERPFLICHTEN ZU SCHADENSERSATZ. ALLE RECHTE FÜR DEN FALL DER PATENTERTEILUNG ODER GEBRAUCHSMUSTER-EINTRAGUNG VORBEHALTEN.
NON È PERMESSO CONDIVIDERE A TERZI O RIPRODURRE QUESTO DOCUMENTO, NE UTILIZZARNE IL CONTENUTO O RENDERNE PUBBLICO IL CONTENUTO O LA NATURA. LA VIOLAZIONE DEI DIRITTI DI PROPRIETÀ INTELLETTUALE RISERVATI DA QUESTO DOCUMENTO OBBLIGA AL RISARCIMENTO DEI DANNI. TUTTI I DIRITTI RISERVATI.
COPYING OF THIS DOCUMENT AND GIVING IT TO OTHERS AND THE USE OR COMMUNICATION OF THE CONTENTS THEREOF, ARE FORBIDDEN WITHOUT EXPRESS AUTHORITY. OFFENDERS ARE LIABLE TO PAY DAMAGES. ALL RIGHTS ARE RESERVED IN THE EVENT OF THE GRANT OF A PATENT OR REGISTRATION OF A UTILITY MODEL OR DESIGN. THIS DOCUMENT IS THE SUBJECT OF COPYRIGHT.