8.4H13 $^{+0.22}_{0}$

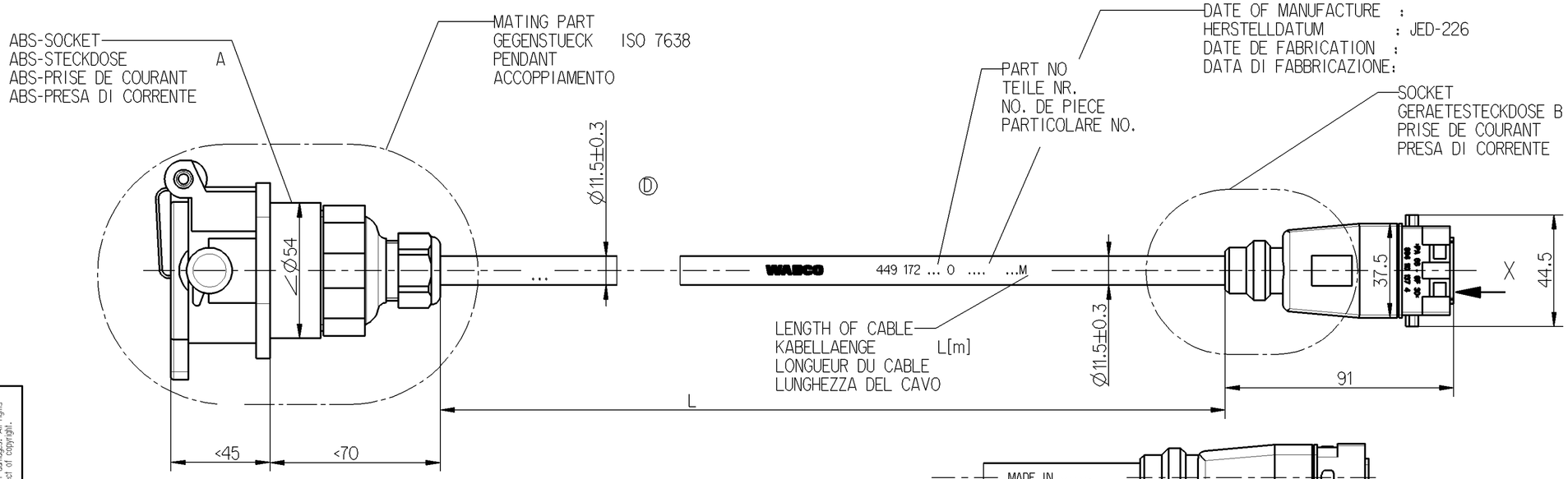

IDENTIFICATION OF COUNTRY OR ORIGIN
* KENNZEICHNUNG WARENURSPRUNGSLAND
IDENTIFICATION DA PAYS D'ORIGINE
IDENTIFICATIONE DEL PAESE D'ORIGINE Ⓓ

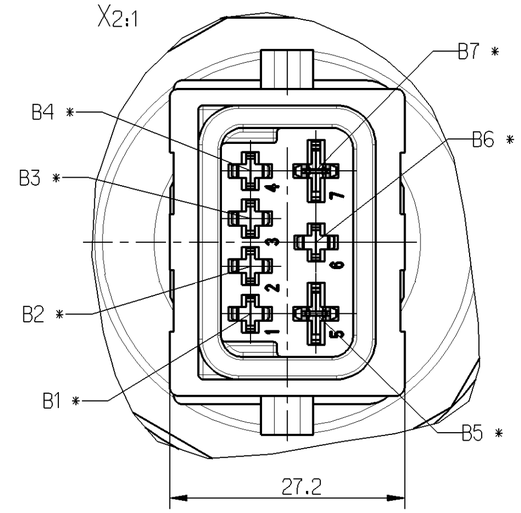

ISO 7638

VOLTAGE
SPANNUNG 24V
TENSION
TENSIONE

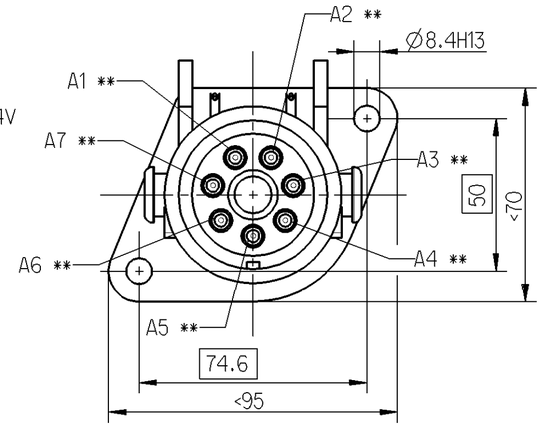

ADMISSIBLE INSTALLATION POSITION
ZULAESSIGE EINBAULAGE
POSITION D'INSTALLATION ADMISE
POSIZIONE DI MONTAGGIO AMMESSA

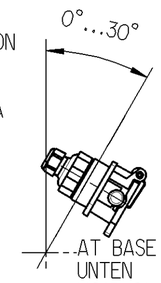

THERMAL RANGE OF APPLICATION :
THERMISCHER ANWENDUNGSBEREICH: -40°C....+80°C
GAMME D'APPLICATION THERMIQUE:
CAMPO TERMICO D'APPLICAZIONE :

RESISTANT TO : AIR,WATER,MINERAL OIL,PETROL,DIESELOIL,SALTSPRAY
BESTAENDIG GEGEN: LUFT,WASSER,MINERALOEL,BENZIN,DIESELOEL,SALZSPRUEHNEBEL
RESISTANT A : AIR,EAU,HUILE MINERALE,ESSENCE,GASOIL,BROUILLARD SALIN
RESISTENTE A : ARIA,AQUA,OLIO MINERALE,BENZINA,GASOLIO,NEBBIA SALINA

DEGREE OF PROTECTION (IN CONNECTION WITH PLUG) :
SCHUTZART (IN VERBINDUNG MIT STECKER) : A: IP 54
DEGRE DE PROTECTION (DANS CONNECTION AVEC FICHE): B: IP 67 / IP 6K 9K
GRADO DI PROTEZIONE (IN RELAZIONE CON SPINA) :

7-CORE CABLE
PUR LEITUNG 7-ADRIG 3x1.5mm²
CABLE A 7 CONDUCTEURS 2x1.0mm² Ⓓ
CAVO A 7 CONDUTTORI 2x4.0mm²

SURFACE PROTECTION :
OBERFLAECHENSCHUTZ : * Sn
PROTECTION DE SURFACE: ** Ni
PROTEZIONE SUPERFICI :

INSTALLATION INSTRUCTIONS FOR CABLES TO BE OBSERVED SEE:
EINBAUHINWEISE FUER KABEL SIND ZU BEACHTEN SIEHE: 449 000 000 0 /611
Ⓓ IL FAUT OBSERVER LES INDICATIONS POUR L'INSTALLATION DES CABLES VOIR:
SONO DA OSSERVARE GLI INDICAZIONE DI MONTAGGIO DEI CAVI VEDERE:

CHAMBER IN: KAMMER IN: A CHAMBRE EN: CAMERA IN:	CABLE KABEL CABLE CAVO / CROSS SECTION QUERSCHNITT SECTION DE TRANSVERSALE SEZIONE TRANSVERSAL	CHAMBER IN: KAMMER IN: B CHAMBRE EN: CAMERA IN:	
1	4mm²	7	
2	1.5mm²	6	
3	1.5mm²	4	
4	4mm²	5	
5	1.5mm²	3	
6	1.0mm²	2	Ⓓ
7	1.0mm²	1	Ⓓ

CODE OF LENGTH LAENGENCODIERUNG CODE DE LA LONGUEUR CODICE DEL LUNGHEZZA	
PART NO TEILE NR. NO DE PIECE CODICE	449 172 □□,□ 0 (L[m])
EXAMPLE BEISPIEL EXEMPLE ESEMPIO	L = 12 m 449 172 120 0
MIN/MAX LENGTH MIN/MAX LAENGE MIN/MAX LONUEUR MIN/MAX LUNGHEZZA	L_{min} = 0.1m L_{max} = 18m
TOLERANCES TOLERANZEN TOLERANCES TOLERANZA	L < 10m ±0.050m L > 10m ±0.075m

DCN-No.	Rev.	Date
110486	6xD	2006-10-16
067945	1xC	1998-10-30
065123	2xB	1997-12-08

State of Revision

General Specification: JED-334-0
Further Technical Data:
Doc. Code: Sheet: To

General Tolerances JED-261

Class 1)	Range of Nominal Dimensions (± mm) ≤ 50	> 50 ≤ 180	> 180 ≤ 400	> 400	∢
Fine	0.5	1.0	1.5	2.0	±3°
Medium	1.0	2.0	3.0	4.0	
Coarse	2.0	3.5	5.0	6.5	

Tapped Holes acc.
1) Tolerance Class Applied Crossmarked

Copyright WABCO ®

	Date	Signature
Drawn	1997-09-12	WEBER
Checked	1997-09-12	HEIN
Expert	Gründker	

WABCO

SUPPLY CABLE
VERSORGUNGSKABEL
CABLE D' ALIMENTATION
CAVO DI ALIMENTAZIONE

Mass	Scale	Material No.			WABCO Id. No.: 4491720000	
- KG	1:1 (2:1)	449 172 000 0			Doc.Code 653	Language en/de fr/it	Sheet 1/1
Size A 2	TRI 650		Function Code	CAD System Pro/E	Prod.Type 1 1 X	Replacement for 884 010 405 0

100mm

Non è permesso consegnare a terzi o riprodurre questo documento, né utilizzarne il contenuto o renderlo comunque noto a terzi senza autorizzazione esplicita. Ogni infrazione costituisce un illecito civile e penale. Tutti i diritti, derivanti da brevetti o modelli, sono riservati.

Toute Communication ou reproduction de ce document, toute exploitation ou communication de son contenu sont interdites, sauf autorisation expresse. Tout manquement à cette règle constitue un délit civil et expose son auteur au versement de dommages et intérêts. Tous droits de propriété industrielle réservés, notamment en matière de brevets et de modèles.

Weitergabe sowie Vervielfältigung dieser Unterlage, Verwertung und Mitteilung ihres Inhalts nicht ausgesagt gestattet. Zuwiderhandlungen stellen einen zivilrechtlichen Missbrauch dar und verpflichten zu Schadensersatz. Alle Rechte für den Fall der Patenterteilung oder Gebrauchsmuster-Eintragung vorbehalten.

In to others and the use or communication of the contents thereof, are forbidden without express authority. Offenders are liable to the payment of damages. All rights are reserved in the event of the grant of patent or registration of a utility model or design. This document is the subject of copyright.

Copying of this document and giving it to others and the use or communication of the contents thereof, are not permitted without express authority. Offenders are liable to the payment of damages. All rights are reserved in the event of the grant of patent or registration of a utility model or design. This document is the subject of copyright.