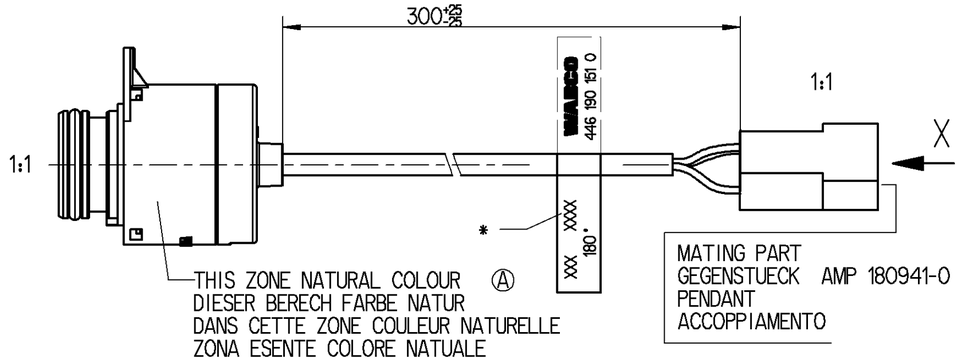

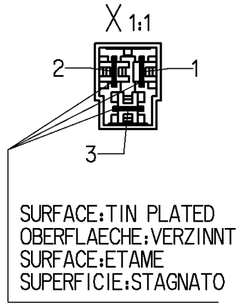

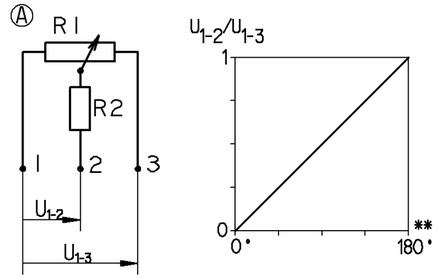

WORKING TEMPERATURE
BETRIEBSTEMPERATUR
TEMPERATURE D'UTILISATION
TEMPERATURA DI ESERCIZIO
-40° ... +80°C

STORAGE TEMPERATURE
LAGERTEMPERATUR
TEMPERATURE DE STOCKAGE
TEMPERATURA DI IMMAGAZZINAMENTO
-40° ... +80°C, 110°C/max.1h

RESISTANCE VALUE
WIDERSTANDSWERT
VALEUR DE RESISTANCE
VALORE DI RESISTENZA
R1= 1kΩ±20%
R2= 2K7Ω±20%

NOMINAL SUPPLY VOLTAGE
NENNVERSORGUNGSSPANNUNG
TENSION NOMINALE D' ALIMENTATION
TENSIONE NOMINALE DI ALIMENTAZIONE
U_{1-3}= 15 VDC

MAX. LOAD CURRENT
MAX. LASTSTROM
COURANT MAXIMAL DE CHARGE
MAX. CORRENTE DI CARICO
I_2= 1 mA

LINEARITY
LINEARITAET (U_{1-2})
LINEARITE
LINEARITA
±2,5% FS (FS=U_{1-3} ; 180°)

OPERATING ANGLE
BETAETIGUNGSWINKEL
ANGLE DE COMMANDE
ANGOLA DI COMANDO
** ELECTRICAL:
ELEKTRISCH:
ELECTRIQUE:
ELETTRICO: 180°±3°

MECHANICAL:
MECH.:
MECANIQUE:
MECCANICO: >360°

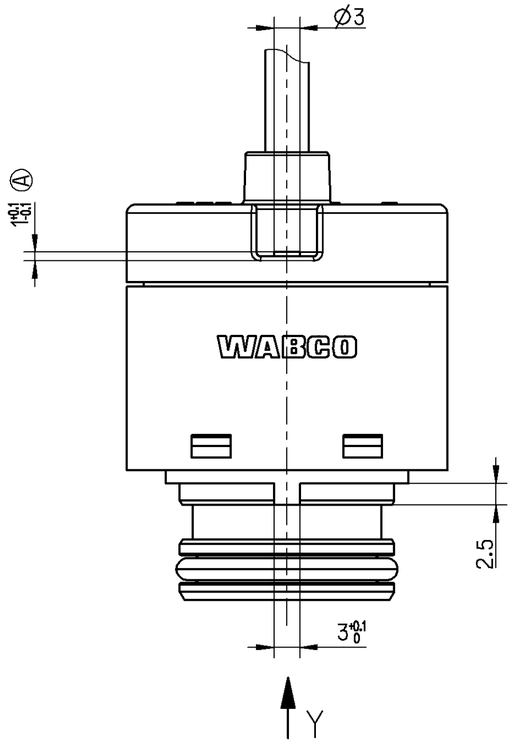

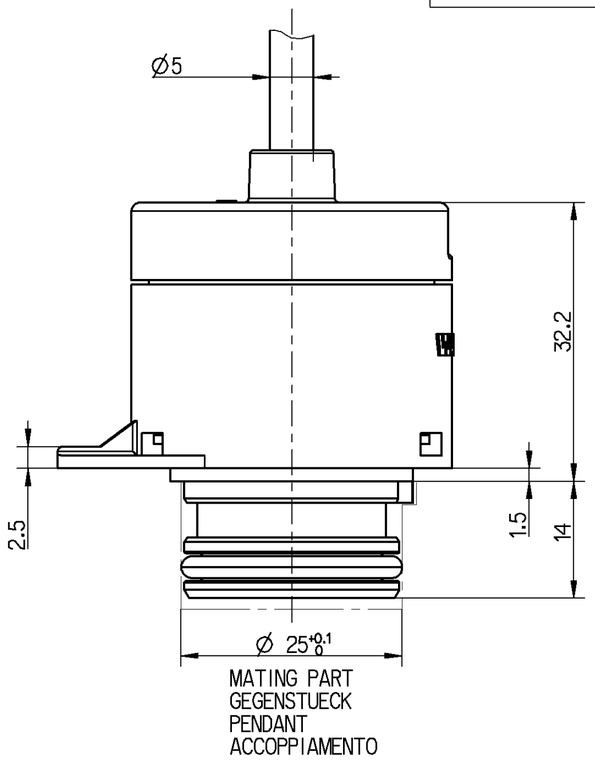

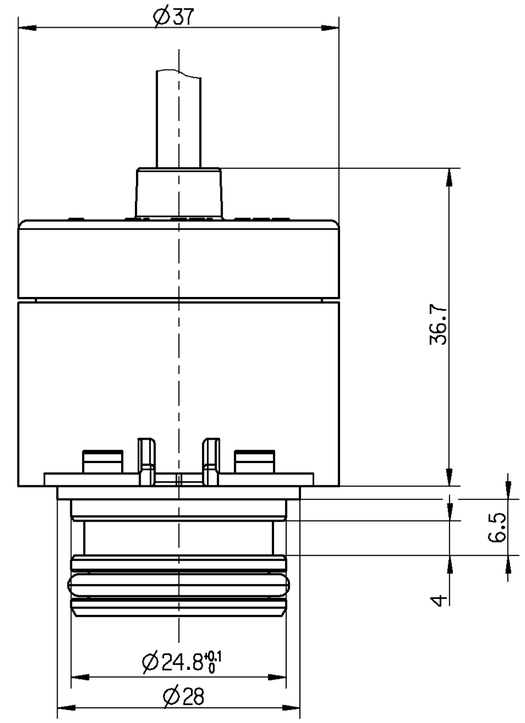

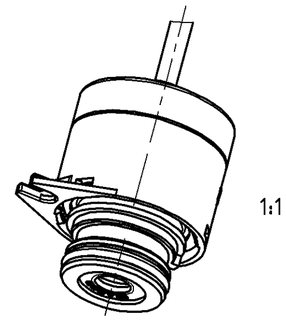

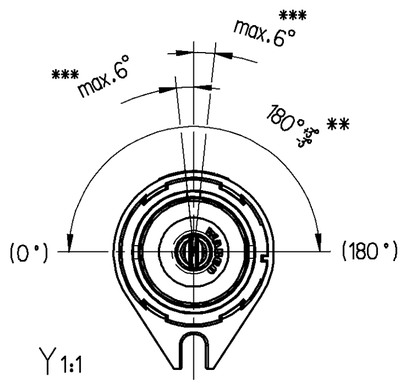

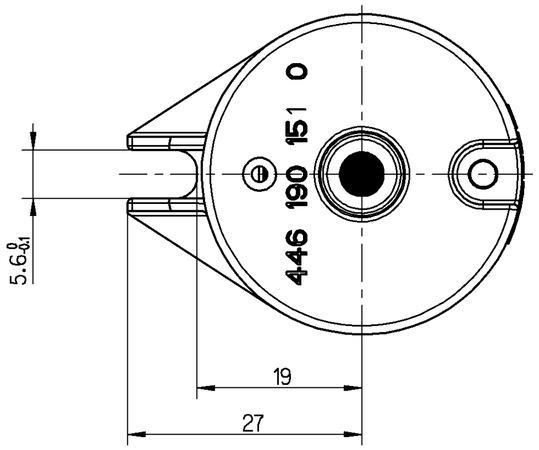

*** TOLERANCE OF POSITION AT
LAGETOLERANZ BEI
TOLERANCE DE POSITION A
TOLLERANZA DI POSIZIONE A
$U_{1-2}=U_{1-3}/2$

* DATE OF MANUFACTURE
HERSTELLDATUM
DATE DE FABRICATION
DATA DI FABBRICAZIONE
JED-344

GENERAL SPECIFICATION: JED-334.0								
FURTHER TECHNICAL DATA: 446 190 150 0								
DOC. CODE: 535		SHEET: TO						
GENERAL TOLERANCES								
		RANGE OF NOMINAL DIMENSIONS (± mm)						
CLASS	1)	≤ 50	> 50 ≤ 180	> 180 ≤ 400	> 400			
FINE		0.5	1.0	1.5	2.0			
MEDIUM	X	1.0	2.0	3.0	4.0	±3°		
COARSE		2.0	3.5	5.0	6.5			
TAPPED HOLES ACC. ISO 4039 / JED-152						076278	3x A	01-05-28
1) TOLERANCE CLASS APPLIED CROSSMARKED						DCN-NO.	REV.	DATE

Pro/ENGINEER DRAWING COPYRIGHT			
DATE	SIGNATURE		
DRAWN			
98-01-12	Gassauer		
CHECKED			
98-01-12	Heinrich		
EXPERT CODE			
9 0 0			
MASS	SCALE	PRODUCT IDENTIFICATION NO.	
0.08 KG	2:1 (1:1)	446 190 151 0	
SIZE	TRI		
A 2	142		
FUNCTION CODE	SHAPE CODE	PRODUCT TYPE	
		0 1	

WABCO

MTS-DOOR SENSOR
MTS-TUERSENSOR
MTS-CAPTEUR DE PORTE
MTS-SENSORE PORTA

DOC. CODE	SHEET
605	1/1

REPLACEMENT FOR
884 904 970 0

NON E PERMESSO CONSEGNARE A TERZI O RIPRODURRE QUESTO DOCUMENTO, NE UTILIZZARNE IL CONTENUTO O RENDERNE COMUNQUE PUBBLICO IL CONTENUTO, SENZA AUTORIZZAZIONE SCRITTA. IN CASO DI CONCESSIONE DI BREVETTO O REGISTRAZIONE DI UN MODELLO DI UTILITÀ DERIVANTI IN BREVETTI O MODELLI.

COPYING OF THIS DOCUMENT AND GIVING IT TO OTHERS AND THE USE OR COMMUNICATION OF THE CONTENTS THEREOF, ARE FORBIDDEN WITHOUT EXPRESS AUTHORITY. OFFENDERS ARE LIABLE TO THE PAYMENT OF DAMAGES. ALL RIGHTS ARE RESERVED IN THE EVENT OF THE GRANT OF PATENT OR REGISTRATION OF A UTILITY MODEL OR DESIGN. THIS DOCUMENT IS THE SUBJECT OF COPYRIGHT.

TOUTE COMMUNICATION OU REPRODUCTION DE CE DOCUMENT, TOUTE EXPLOITATION OU COMMUNICATION DE SON CONTENU SONT INTERDITES, SAUF AUTORISATION ÉCRITE. DES DOMMAGES-INTÉRÊTS SONT DÛS POUR TOUTE INFRACTION. EN CAS DE DELIVRANCE DE BREVET OU D'ENREGISTREMENT D'UN MODELE D'UTILITE, TOUS DROITS DE PROPRIETE INDUSTRIELLE RESERVES. NOTAMMENT EN MATIERE DE BREVETS ET DE MODELES.

WEITERGABE SOWIE VERVIELFÄLTIGUNG DIESER UNTERLAGE, VERWERTUNG UND MITTEILUNG IHRES INHALTS NICHT GESTATTET SOWEIT NICHT AUSDRÜCKLICH ZugESTANDEN. ZUWIDERHANDELNDE SIND ZU SCHADENSERSATZ VERPFLICHTET. WEITERE RECHTE SIND VORBEHALTEN FÜR DEN FALL DER PATENTERTEILUNG ODER GEBRAUCHSMUSTER-EINTRAGUNG VORBEHALTEN.

Drw.: 446190151O____605 A.1 ENTWICKLUNG

Mdl.: 446190151O____A01 ..3