SURFACE PROTECT./OBERFL.SCHUTZ	
I	JED-260
II	JED-256-1

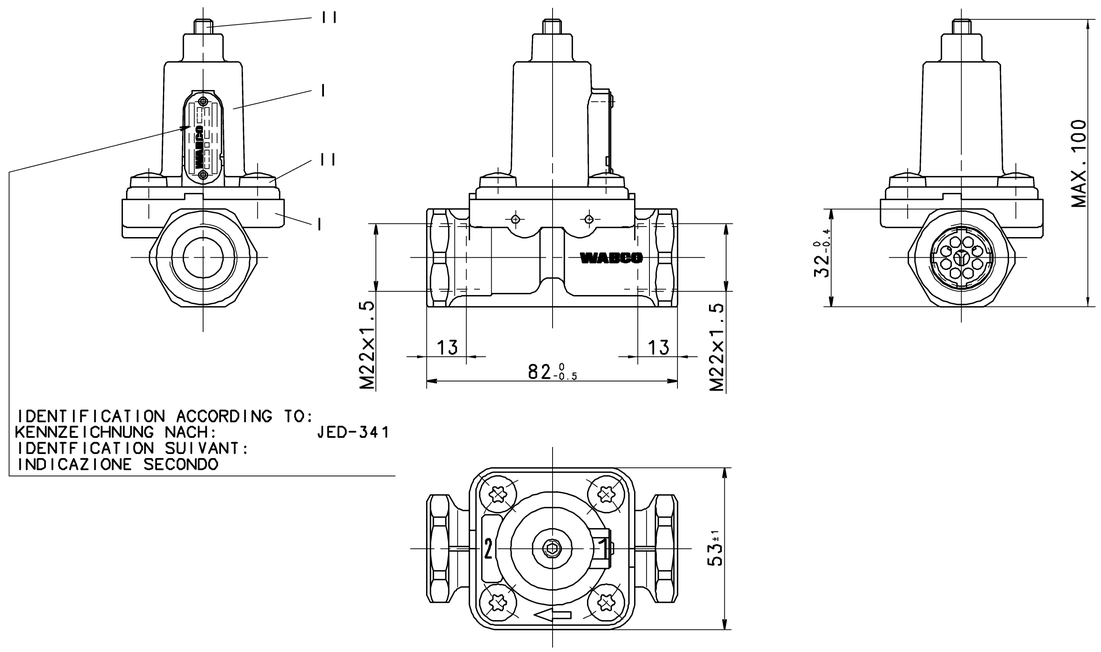

IDENTIFICATION ACCORDING TO:
KENNZEICHNUNG NACH: JED-341
IDENTFICATION SUIVANT:
INDICAZIONE SECONDO

CUSTOMERS NO.
KUNDEN-NR.
NO. CLIENT
CLIENTE

DATE OF MANUFACTURE
HERSTELLDATUM
DATE DE FABRICATION
DATA DI FABBRICAZIONE

PRI
BARCODE-WABCO
BARCODE-WABCO
CODEBARRE-WABCO
CODICE A BARRE-WABCO

WABCO IDENTIFICATION NUMBER
WABCO IDENTIFIKATIONS NUMMER
WABCO NUMERO D'IDENTIFICATION
WABCO NUMERO D'IDENTIFICAZIONE

TORQUE FOR CONNECTIONS:
ANZUGSMOMENT FUER EINSCHRAUBSTUTZEN:
COUPLE DE SERRAGE DES RACCORDS:
COPPIA DI SERRAGGIO DEI RACCORDI: M22x1.5: $M_{max.}$ = 53 Nm

WORKING PRESSURE:
BETRIEBSDRUCK:
PRESSION DE SERVICE:
PRESSIONE D'ESERCIZIO: MAX. p_e = 13 bar

THERMAL RANGE OF APPLICATION:
THERMISCHER ANWENDUNGSBEREICH:
GAMME D'APPLICATION THERMIQUE:
CAMPO DI APPLICAZIONE TERMICA: -40°C...+80°C

MEDIUM: AIR
MEDIUM: LUFT
FLUIDE: AIR
FLUIDO: ARIA

NOMINAL DIAMETER:
NENNWEITE:
DIAMETRE NOMINAL:
DIAMETRO NOMINALE: Ø8mm = 50mm²

CHARGING PRESSURE: SEE TABLE
UEBERSTROEMDRUCK: SIEHE TABELLE
PRESSION DE BARRAGE: VOIR TABLEAU
PRESSIONE DI PRESA: VEDERE TABELLA

WITHOUT RETURN FLOW
OHNE RURCKSTROEMUNG
SANS RETOUR
SENZA RITORNO

**) LOAD: SEE PRODUCT SPECIFICATION
BELASTUNG: SIEHE PRODUKTSPEZIFIKATION
CHARGE: VOIR PRODUCT SPECIFICATION
CARICO: VEDERE SPECIFICADI PRODOTTO

1 SUPPLY
ENERGIEZUFLUSS
ALIMENTATION
ALIMENTAZIONE

2 DELIVERY
ENERGIEABFLUSS
UTILISATION
MANDATA

DEVICE NUMBER GERAETE-NUMMER NUMERO D' APPAREIL NUMERO CODICE DELL APPARECCHIO WABCO	CUSTOMERS NO. KUNDEN-NR. NO. CLIENT CLIENTE	ZGS	CAD	CHARGING PRESSURE UEBERSTROEMDRUCK PRESSION DE BARRAGE PRESSIONE DI PRESA p_e =(bar) (p_2 =0bar)
Ⓜ434 100 603 0				$2.0^{+0.0}_{-0.3}$
434 100 601 0				$5.2^{+0.3}_{0}$
434 100 600 0				$8.0^{+0.3}_{0}$
434 100 143 0				$9.0^{0}_{-0.3}$ **)
434 100 139 0				$8.5^{0}_{-0.3}$
434 100 133 0				$7.8^{0}_{-0.3}$
434 100 131 0				$7.3^{0}_{-0.3}$
434 100 130 0				$7.0^{0}_{-0.3}$
434 100 128 0				$5.3^{0}_{-0.3}$
434 100 127 0				$6.7^{0}_{-0.3}$
434 100 126 0				$6.5^{0}_{-0.3}$
434 100 125 0				$6.0^{0}_{-0.3}$
434 100 124 0				$5.5^{0}_{-0.3}$
434 100 123 0				$5.0^{0}_{-0.3}$
434 100 122 0				$4.5^{0}_{-0.3}$
434 100 121 0				$4.0^{0}_{-0.3}$

TOUTE COMMUNICATION OU REPRODUCTION DE CE DOCUMENT, TOUTE EXPLOITATION OU COMMUNICATION DE SON CONTENU NE SONT PAS AUTORISÉES SAUF AUTORISATION ÉCRITE. TOUS DROITS DE PROPRIÉTÉ INTELLECTUELLE SONT RÉSERVÉS.
NON È PERMESSO CONSEGNARE A TERZI O RIPRODURRE QUESTO DOCUMENTO, NE UTILIZZARE IL CONTENUTO O REVEL ALTRI ED EVENTUALI DIRITTI DI PROPRIETÀ INTELLETTUALE SONO RISERVATI.
WITTEILUNG SOWIE VERVIELFÄLTIGUNG DIESER UNTERLAGE, VERWERTUNG UND MITTEILUNG IHRES INHALTS NICHT GESTATTET SOWEIT NICHT AUSDRÜCKLICH ZUGESTANDEN. ZUWIDERHANDLUNGEN VERPFLICHTEN ZU SCHADENSERSATZ. SONSTIGE RECHTE VORBEHALTEN.
DOCUMENT AND DATA MAY NOT BE REPRODUCED OR DISCLOSED, NOR MAY THE CONTENTS BE USED OR DISCLOSED WITHOUT WRITTEN PERMISSION. ALL RIGHTS ARE RESERVED IN THE EVENT OF THE GRANTING OF PATENT OR REGISTRATION OF A UTILITY MODEL OR DESIGN THIS DOCUMENT IS THE SUBJECT OF COPYRIGHT.

GENERAL SPECIFICATION: JED-334			
FURTHER TECHNICAL DATA:			
DOC. CODE:	SHEET:	TO	

GENERAL TOLERANCES

CLASS 1)	RANGE OF NOMINAL DIMENSIONS (± mm) ≤50	>50 ≤180	>180 ≤400	>400	
FINE	0,5	1,0	1,5	2,0	± 3°
MEDIUM ☒	1,0	2,0	3,0	4,0	
COARSE	2,0	3,5	5,0	6,5	

TAPPED HOLES ACC. ISO 4039 / JED-152
1) TOLERANCE CLASS APPLIED CROSSMARKED

DCN-ND.	REV.	DATE
063461	3xM	06-02-14
082491	2xL	02-04-24
077898	4xK	01-11-09

CADIM-DRAWING COPYRIGHT

DATE	SIGNATURE
90-03-27	SEEW.
CHECKED: 90-03-27	DEIKE
STANDARDIZATION: 90-03-27	PANT.

WABCO

CHARGING VALVE
UEBERSTROEMVENTIL
VALVE DE BARRAGE
VALVOLA DI PRESA D'ARIA

MASS	SCALE	PRODUCT IDENTIFICATION NO.	DOC. CODE	SHEET
0.450 KG	1:1	434 100 199 0	653	1/1
SIZE A 1	T.R.I. 510 Ⓜ	SHAPE CODE	REPLACEMENT FOR 434 100 199 0 OF 90-03-27	

100mm

EXPERT CODE 8 1 8 Ⓜ

PRODUCT TYPE 0 0 ☒

1018/016/13/04.93
835/653