	MATERIAL	SURFACE PROTECTION
I	JED 015M1	JED 256 (J)
II	JED 061M	/

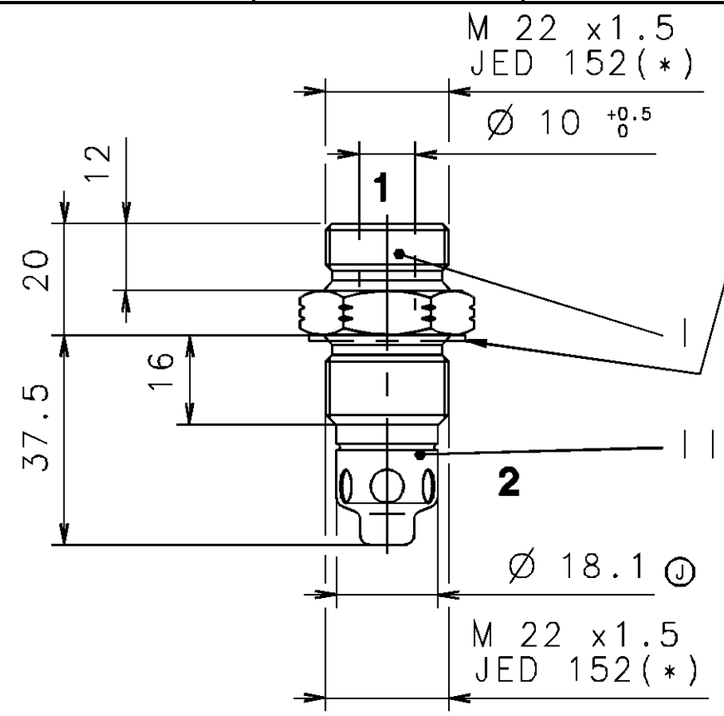

ASSEMBLY WITH SEALING RING
ZUSAMMENBAU MIT DICHTRING
MONTAGE AVEC JOINT
MONTAGGIO CON GUARNIZIONE — Ø int 22.4 — BNA 230 / NFE 21 351 / DIN 7603 AL

MEDIUM : AIR
MEDIUM : DRUCKLUFT
FLUIDE : AIR
FLUIDO : ARIA

THERMAL RANGE
THERM.ANWENDUNGSBEREICH
TEMPERATURE D'UTILISATION
TEMPERATURA DI UTILIZZAZIONE — -40°c...+80°c

(J) TORQUE
ANZUGSMOMENT
* COUPLE DE SERRAGE
COPPIA DI SERRAGGIO — 53 N.m MAX

(J) SYMBOL
SYMBOL
SYMBOLE
SIMBOLO

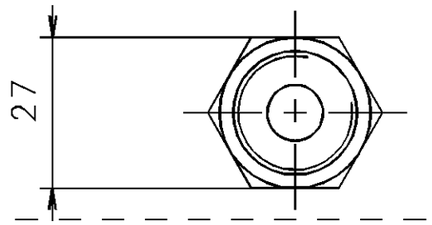

1 AIR SUPPLY
LUFTZUFUHR
ALIMENTATION AIR
(J) ALIMENTAZIONE ARIA

2 DELIVERY
AUSGESTEUERTE
UTILISATION
UTILIZZAZIONE

FURTHER TECHNICAL DATA SEE					
IDENTIFICATION NO.:					
CODE FOR DOCUMENT: 605	SHEET:	TO			

GENERAL TOLERANCES

CLASS	1)	RANGE OF NOMINAL DIMENSIONS (± mm) ≤50	> 50 ≤180	>180 ≤400	>400	∡
I		0,5	1,0	1,5	2,0	± 3°
II		1,0	2,0	3,0	4,0	
III		2,0	3,5	5,0	6,5	

TAPPED HOLES ACC. [redacted] / [redacted]

1) TOLERANCE CLASS APPLIED CROSSMARKED

DCN-NO.	REV.	DATE
	L	
	K	
94 084	6 x Ø	21-04-94
	H	
	G	
	F	
	E	
	D	
	C	
	B	
	A	

100mm

COPYRIGHT

	DATE	SIGNATURE
DRAWN	19-04-94	D GESTIN
CHECKED	20-04-94	BION
STANDARDIZATION	21-04-94	94 084

WABCO

SINGLE CHECK VALVE
RUCKSCHLAGVENTIL
VALVE DE RETENUE
VALVOLA DI RITENUTA

MASS	SCALE	PRODUCT IDENTIFICATION NO.	CODE FOR DOCUMENT	SHEET
0.142 kg	1/1	434 021 000 0	605	1/1
SIZE	T.R.I.			
A 3	210			

CODE F.PROD.-GROUP | CODE FOR SHAPE | REPLACEMENT FOR (J) DRAWING OF 10-06-80

EXPERT CODE [ ][ ][ ] TYPE OF PRODUCT [ ][ ][X]

NON È PERMESSO CONSEGNARE A TERZI O RIPRODURRE QUESTO DOCUMENTO, NE UTILIZZARNE IL CONTENUTO O RENDERLO COMUNQUE NOTO A TERZI SENZA AUTORIZZAZIONE ESPLICITA. OGNI INFRAZIONE COSTITUIRÀ UN EVIDENTE ABUSO E COMPORTERÀ IL RISARCIMENTO DEI DANNI SUBITI. E' FATTA RISERVA DI TUTTI I DIRITTI DERIVANTI DA BREVETTI O MODELLI.
COPYING OF THIS DOCUMENT, AND GIVING IT TO OTHERS AND THE USE OR COMMUNICATION OF THE CONTENTS THEREOF, ARE FORBIDDEN WITHOUT EXPRESS AUTHORITY. CONTRAVENTION OF THIS RESTRICTION WILL CONSTITUTE AN EVIDENT ABUSE AND RESULT IN A LIABILITY TO THE PAYMENT OF DAMAGES. ALL RIGHTS ARE RESERVED IN THE EVENT OF THE GRANT OF A PATENT OR THE REGISTRATION OF AN UTILITY MODEL OR DESIGN. THIS DRAWING IS SUBJECT TO COPYRIGHT.

TOUTE COMMUNICATION OU REPRODUCTION DE CE DOCUMENT, TOUTE EXPLOITATION OU COMMUNICATION DE SON CONTENU SONT INTERDITES, SAUF AUTORISATION EXPRESSE. TOUT MANQUEMENT À CETTE REGLE CONSTITUE UN ABUS EVIDENT ET EXPOSE SON AUTEUR AU VERSEMENT DE DOMMAGES ET INTERETS. TOUS DROITS DE PROPRIETE INDUSTRIELLE RESERVES, NOTAMMENT EN MATIERE DE BREVETS ET DE MODELES.
WEITERGABE SOWIE VERVIELFÄLTIGUNG DIESER UNTERLAGE, VERWERTUNG UND MITTEILUNG IHRES INHALTS NICHT GESTATTET, SOWEIT NICHT AUSDRÜCKLICH ZUGESTANDEN. ZUWIDERHANDLUNGEN STELLEN EINEN OFFENSICHTLICHEN MISSBRAUCH DAR UND VERPFLICHTEN ZU SCHADENERSATZ. ALLE RECHTE FÜR DEN FALL DER PATENTERTEILUNG ODER GEBRAUCHSMUSTER - EINTRAGUNG VORBEHALTEN.

86-01