SURFACE PROTECTION
OBERFLAECHENSCHUTZ
PROTECTION DE SURFACE
PROTEZIONE SUPERFICIALE

I	JED-259
II	JED-256
III	JED-471 SCHWARZ/BLACK
IV	KUNSTSTOFF/PLASTIC
V	JED-570.656

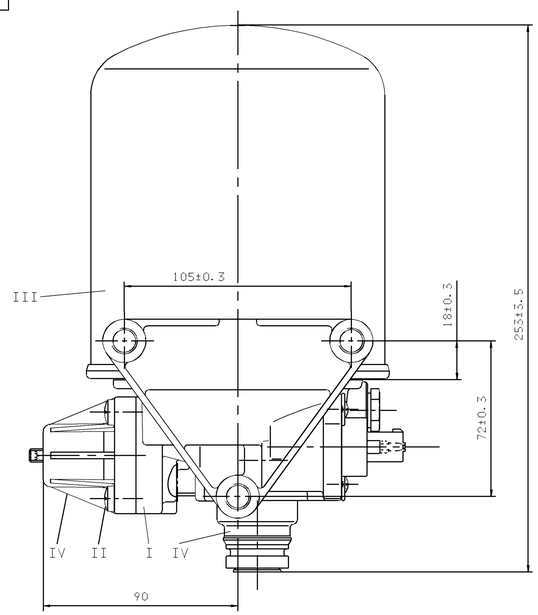

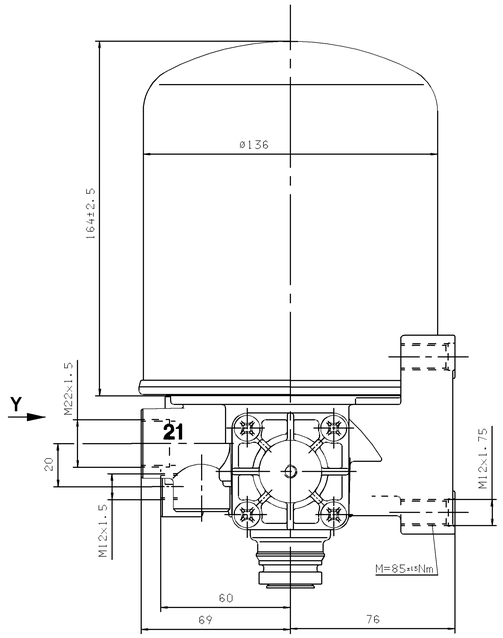

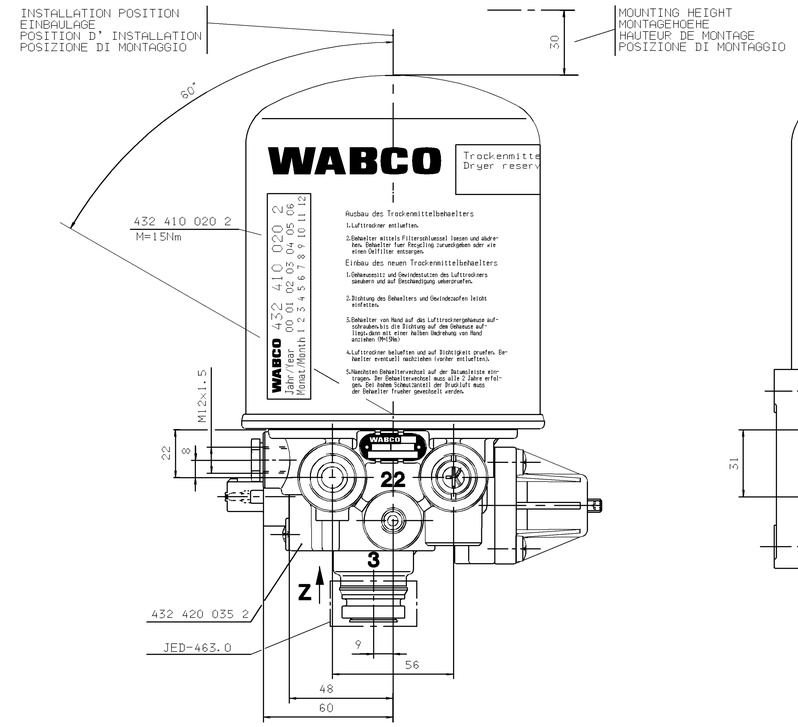

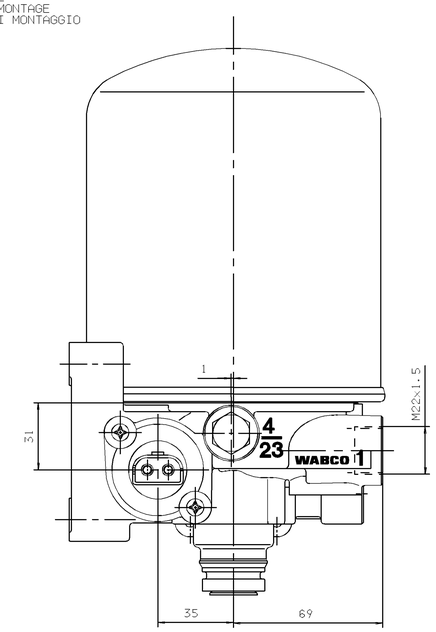

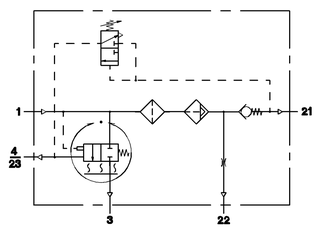

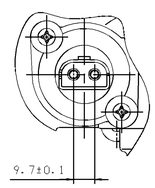

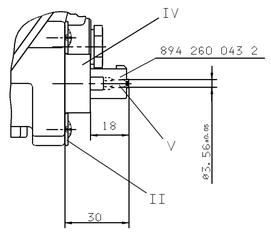

1 FROM THE COMPRESSOR
VOM KOMPRESSOR
PROVENANT DU COMPRESSEUR
PROVENIENTE DEL COMPRESSORE

21 TO THE RESERVOIRS
ZU DEN LUFTBEHAELTERN
AUX RESERVOIR
AL SERBATOII PER

22 TO THE RESERVOIRS FOR REGENERATED AIR
ZUM REGENERATIONS-LUFTBEHAELTER
AUX RESERVOIRS D' AIR REGENERE
AL SERBATOII PER L' ARIA RIGENERATA

4/23 TO THE COMPRESSOR
ZUM KOMPRESSOR
AU COMPRESSEUR
AL COMPRESSORE

3 EXHAUST FOR COMPRESSED AIR
ENTLUEFTUNG FUER DRUCKLUFT
ECHAPPEMENT POUR AIR COMPRIME
SCARIO PER ARIA COMPRESSA

THERMAL RANGE OF CONTINUOUS APPLICATION:
THERMISCHER DAUERANWENDUNGSBEREICH:
PLAGE DE TEMPERATURE EN UTILISATION CONTINUE: -40°C....+65°C
COMPO DI APPLICAZIONE CONTINUA:

RESISTANCE TO HEAT:
WAERMEBESTAENDIGKEIT:
RESISTANCE A LA CHALEUR: MAX.+80°C
RESISTANZA AL CALORE:

MEDIUM: COMPRESSED AIR
MEDIUM: DRUCKLUFT
FLUIDE: AIR COMPRIME
FLUIDO: ARIA COMPRESSA

WORKING PRESSURE:
BETRIEBSDRUCK:
PRESSION DE SERVICE: P_e max.=13bar
PRESSIONE D' ESERCIZIO:

INSTALLATION POSITION AS DRAWN
EINBAULAGE WIE GEZEICHNET
POSITION D' INSTALLATION SUIVANT DESSIN
POSIZIONE DI MONTAGGIO COME DISEGNATO

MAX. PERMISSIBLE ACCLERATION: ±10×g
MAX. ZULAESSIGE BESCHLEUNIGUNG:
ACCELERATION MAX. ADMISSIBLE:
ACCELERAZIONE MAX. AMMESSA:

MAX. PERMISSIBLE FREQUENCY
MAX. ZULAESSIGE FREQUENZ 50 Hz
MAX. ADMISSIBLE FREQUENZE
MAX. AMMISSIBLE FREQUENZA

TORQUE FOR CONNECTIONS:
ANZUGSMOMENT FUER EINSCHRAUBSTUTZEN: M12×1.5: $M_{max.}$ = 21 Nm
COUPLE DE SERRAGE DES RACCORDS: M22×1.5: $M_{max.}$ = 53 Nm
COPPIA DI SERRAGGIO DEI RACCORDI:

HEATING:
HEIZUNG:
CHAUFFAGE:
RISCALDAMENTO:

CUT-IN TEMPERATURE
EINSCHALT-TEMPERATUR
TEMPERATURE DE FERMETURE 7°±6°C
TEMPERATURA DI CHIUSURA

CUT-OFF TEMPERATURE
AUSSCHALT-TEMPERATUR 29.5°±3°C
TEMPERATURE DE MISE
TEMPERATURA DI APERTURA

BATTERY VOLTAGE:
BATTERIESPANNUNG: $24^{+4.8}_{-2.4}$ V DC
TENSION DE BATTERIE:
TENSIONE DI BATTERIA:

POWER: WITHOUT CURRENT
LEISTUNG: STROMLOS
PUISSANCE: 100 W SANS COURANT
POTENZA: SENZA CORRENTE

WITH
BEI
AVEC
CON
95^{0}_{-5} W 24 V DC

APPLIED ACROSS THE HEATER CONTACTS
DIREKT AN DEN HEIZUNGSKONTAKTEN
APPLIQUEE SUR LES CONTACTS DE CHAUFFAGE
APPLICATA SULLE CONTATTI DI RISCALDAMENTO

GOVERNOR
GOVERNOR
PILOTAGE
COMANDO

CUT OUT PRESSURE
ABSCHALTDRUCK 12 ±0.2 bar
PRESSION DE DECL
PRESSIONE D'APERT

OPERATING RANGE
SCHALTSPANNE
PLAGE DE REGULATION $0.9^{+0.7}_{0}$ bar
GAMMA DI REGOLAZIONE

SAFETY PRESSURE OF THE PURGE VALVE AT V_N= 100 dm³: ≤ 19 bar
SICHERHEITSDRUCK DES LEERLAUFVENTILES BEI

GENERAL SPECIFICATION: JED-334																							
FURTHER TECHNICAL DATA:																							
DOC. CODE:						SHEET:		TO															
GENERAL TOLERANCES																							
CLASS 1)	RANGE OF NOMINAL DIMENSIONS (± mm)																						
		≤50	>50 ≤180	>180 ≤400	>400																		
FINE		0.5	1.0	1.5	2.0																		
MEDIUM	X	1.0	2.0	3.0	4.0	± 5°																	
COARSE		2.0	3.5	5.0	6.5																		
TAPPED HOLES ACC. ISO 4029 / JED-152																							
1) TOLERANCE CLASS APPLIED CROSSWAYSES																							

	L		
	K		
	J		
	H		
	G		
	F		
	E		
	D		
	C		
302049	B	07-02-02	
301874	A	12-07-01	
	REV.	DATE	

CROSS-DRAWING COPYRIGHT			
DATE	SIGNATURE		
DRAWN: 12-07-01	STREHLOW		
CHECKED: 12-07-01	TONKIN		
EUROPT CODE	326		
MASS 4.23 kg	SCALE 1:1		
SIZE A0	S.N.L. 300		

WABCO

AIR DRYER
LUFTTROCKNER
DESSICATEUR D' AIR
ESSICATORE D' ARIA

PRODUCT IDENTIFICATION NO.: 432 410 087 0

DOC. CODE	SHEET
605	1/1

PROD. GROUP	SHAPE CODE	PRODUCT TYPE	REPLACEMENT FOR
5052		003	

100mm