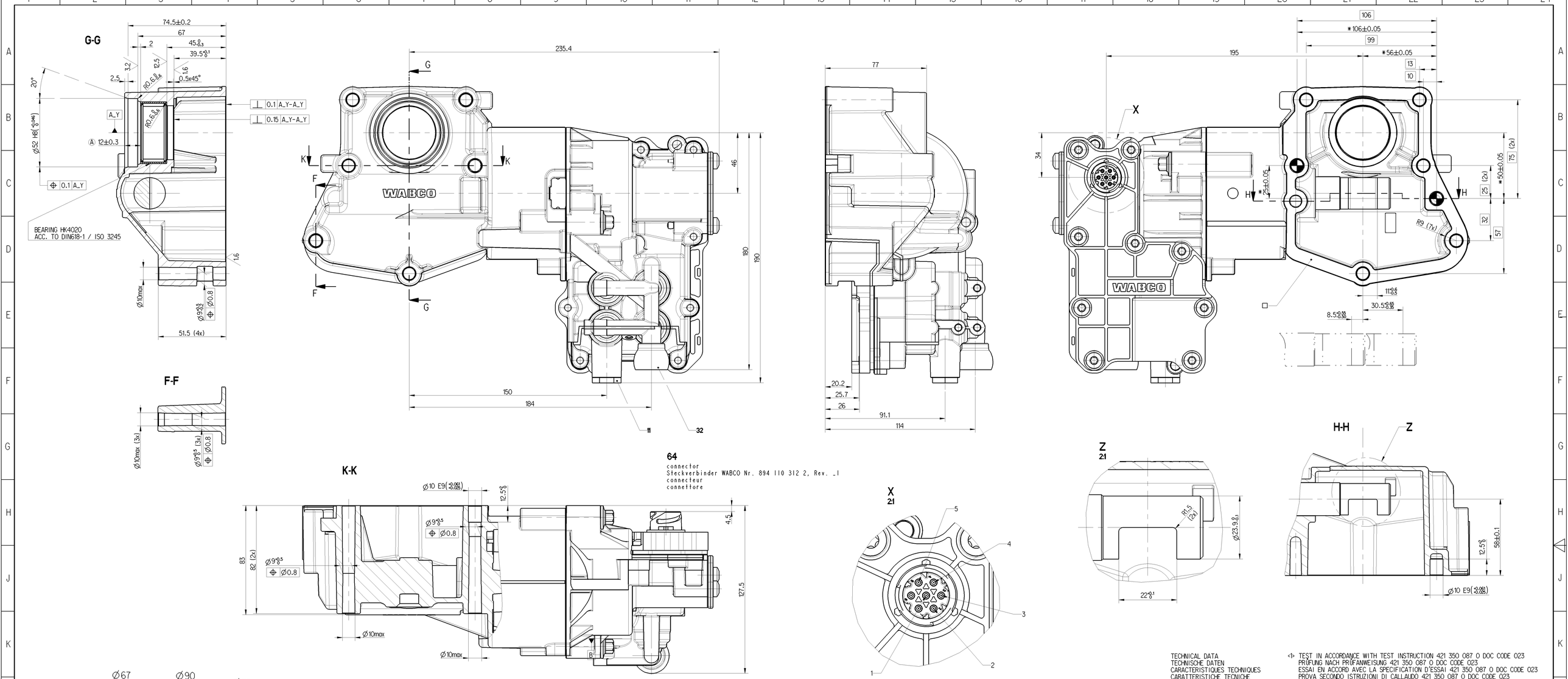

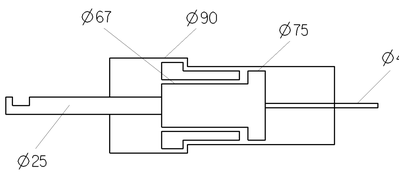

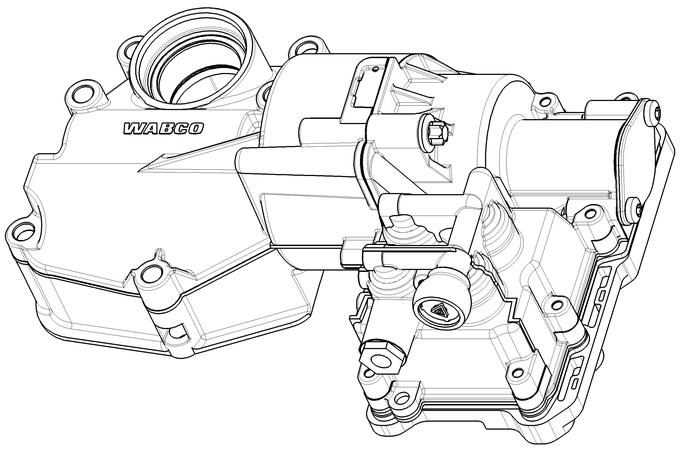

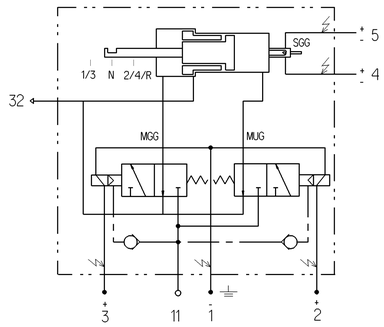

POS.	NAME
7	
6	
5	SGG
4	SGG
3	MGG
2	MUG
1	MV Gnd

PERMISSIBLE CLEANLINESS CLASS:
ZULAESSIGE SAUBERKEITSKLASSE: JED-593 CLASS III

ANTI-FRETTING CORROSION GREASE USED ON ELECTRICAL CONNECTORS FOR DISTANCE SENSOR. FETT GEGEN REIBKORROSION ANGEWENDET AN DEN ELEKTRISCHEN ANSCHLÜSSEN ZUM WEGSENSOR.

TECHNICAL DATA
TECHNISCHE DATEN
CARACTERISTIQUES TECHNIQUES
CARATTERISTICHE TECNICHE

<1> TEST IN ACCORDANCE WITH TEST INSTRUCTION 421 350 087 0 DOC CODE 023
PRÜFUNG NACH PRÜFANWEISUNG 421 350 087 0 DOC CODE 023
ESSAI EN ACCORD AVEC LA SPECIFICATION D'ESSAI 421 350 087 0 DOC CODE 023
PROVA SECONDO ISTRUZIONI DI CALLAUDO 421 350 087 0 DOC CODE 023

* VALID FOR FIT HOLE
GILT FÜR PASSBOHRUNG
VALABLE LE AJUSTEMENT ALESAGE
VALIDO LA ACCOPPIAMENTO FORO

FIT HOLE
PAßBOHRUNG
ALESAGE D'AJUSTEMENT
FORO D' ACCOPPIAMENTO

INSTALLATION POSITION :OPTIONAL
EINBAULAGE :BELIEBIG
POSITION D'INSTALLATION :QUELCONQUE
POSIZIONE DI MONTAGGIO :A SCELTA

N CENTRAL POSITION (AERATED)
MITTELSTELLUNG (BELUEFTET)
POSITION MEDIANE (AERE)
POSIZIONE MEDIA (AERATA))

11 SUPPLY OF ENERGY
ENERGIEZUFLUSS
APPORT D'ENERGIE
ALIMENTAZIONE DI ENERGIA

32 EXHAUST
ENTLUEFTUNG
ECHAPPEMENT
SCARICO

64 ELECTRICAL CONTROL
ELEKTRISCHER STEUERANSCHLUSS
COMMANDE ELECTRIQUE
COMANDO ELETTRICO

□ MAX PERMISSIBLE ACCORDING TO JED-588:
MAX ZULÄSSIG ENTSPRECHEND JED-588: 3.2 / 2.3
MAX ADMISSIBLE SUIVANT JED-588:
MASS AMMISSIBILE JED-588

WORKING MEDIUM :AIR
ARBEITSMEDIUM : LUFT
FLUIDE D'UTILISATION:AIR
FLUIDO DI ESERCIZIO :ARIA

THERMAL RANGE OF APPLICATION :
THERMISCHER ANWENDUNGSBEREICH: -35°....+130°
GAMME D'APPLICATION THERMIQUE:
CAMPO TERMICO D'APPLICAZIONE :

RELATIVE DUTY CYCLE :
RELATIVE EINSCHALTDAUER : 25%
TAUX DE TRAVAIL (PLAGE D' UTILISATION :
DURATE DELL 'INSERIMENTO :

NOMINAL CURRENT AT ROOM TEMPERATURE :
NENNSTROM BEI RAUMTEMPERATUR : 0.4 A /MAGNET
COURANT NOMINAL A LA TEMPERATURE AMBIENTE :
CORRETE NOMINAL ALLA TEMPERATURA AMBIENTE :

VOLTAGE :
SPANNUNG : 24^{+6}_{-2} V DC
VOLTAGE :
VOLTAGIO :

TYPE OF CURRENT :DIRECT CURRENT
STROMART :GLEICHSTROM
NATURE DE COURANT :COURANT CONTINU
NATURA DELLA CORRENTE :CORRENTE CONTINUA

DEGREE OF PROTECTION:
SCHUTZART : IP 69K
DEGRE DE PROTECTION :
GRADO DI PROTEZIONE :

PROTECTION CLASS :
SCHUTZKLASSE : III
CLASSE DE PROTECTION:
CLASSE DI PROTEZIONE:

WORKING PRESSURE (SUPPLY) :
BETRIEBSDRUCK (VORRAT) : Pe = 4.5....10bar
PRESSION D'UTILISATION (ALIMENTATION) :
PRESSIONE DI ESERCIZIO (ALIMENTAZIONE) :

MIN. FLOW PASSAGE /NOMINAL DIAMETER
MIN. DURCHFLUSSOEFFNUNG /NENNWEITE
MIN. ORIFICE CALIBRE /DIAMETRE NOMINAL
MIN. PASSAGGIO LIBERO /DIAMETRO NOMINALE)

PORT 11:
ANSCHLUSS 11: VOSS NG 8 18.1mm□ (=Ø4.8mm)
ORIFICE 11:
ORIFIZIO 11:

SUPPLY :
BEL□FTUNG :18.1mm□ (=Ø4.8mm)
3/2 SOLENOID MGG/MUB : ALIMENTATION :
3/2 VENTILMAGNET MGG/MUB : ALIMENTAZIONE:
3/2 AIMANT MGG/MUB :
3/2 SOLENOIDE MGG/MUB : EXHAUST :
ENTL□FTUNG :18.1mm□ (=Ø4.8mm)
ESCHAPPEMENT :
SCARICO :

General Specification: JED-334-1 _ Size ISO 14405 LP					
Further Technical Data:					
Doc.-Code:		Sheet:	To		
General Tolerances JED-261					
Range of Nominal Dimensions (in mm)					
Class 11	≤ 50	> 50 ≤ 180	> 180 ≤ 400	> 400	
Fine	0.5	1.0	1.5	2.0	
Medium X	1.0	2.0	3.0	4.0	±3°
Coarse	2.0	3.5	5.0	6.5	
Tapped Holes acc. -					
11 Tolerance Class Applied Crossmarked					

Copyright WABCO®

Date	Signature
Drawn: 2015-02-18	Przybysz
Checked: 2015-02-18	Pawłowski
Agent: Schulz	

Mass	Scale	Material No.	Date of first issue: 2014-10-16
3.93 KG	1:1 (2:1)	421 350 087 0	Doc.Code 005 / Language ML / Sheet 1/1
Size A 0	CAD System CREO	ECN-No. 156960 / Revision 2x A / Techn. Resp. 0953	Replacement for -

WABCO

3 POSITION CYLINDER
3 STELLUNGSZYLINDER
3 POSITION CYLINDRE
3 POSIZIONE CILINDRO

100mm