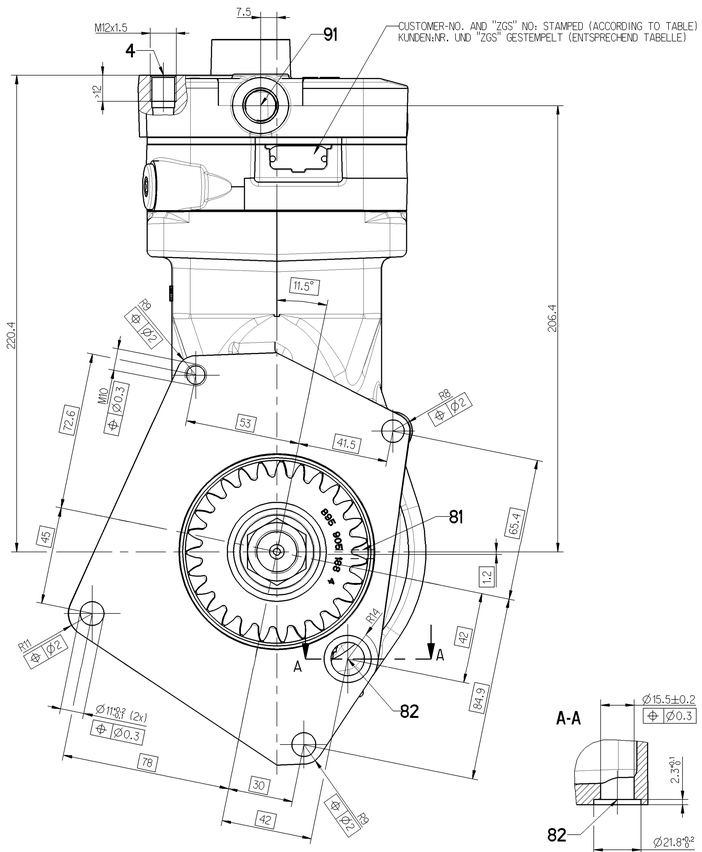

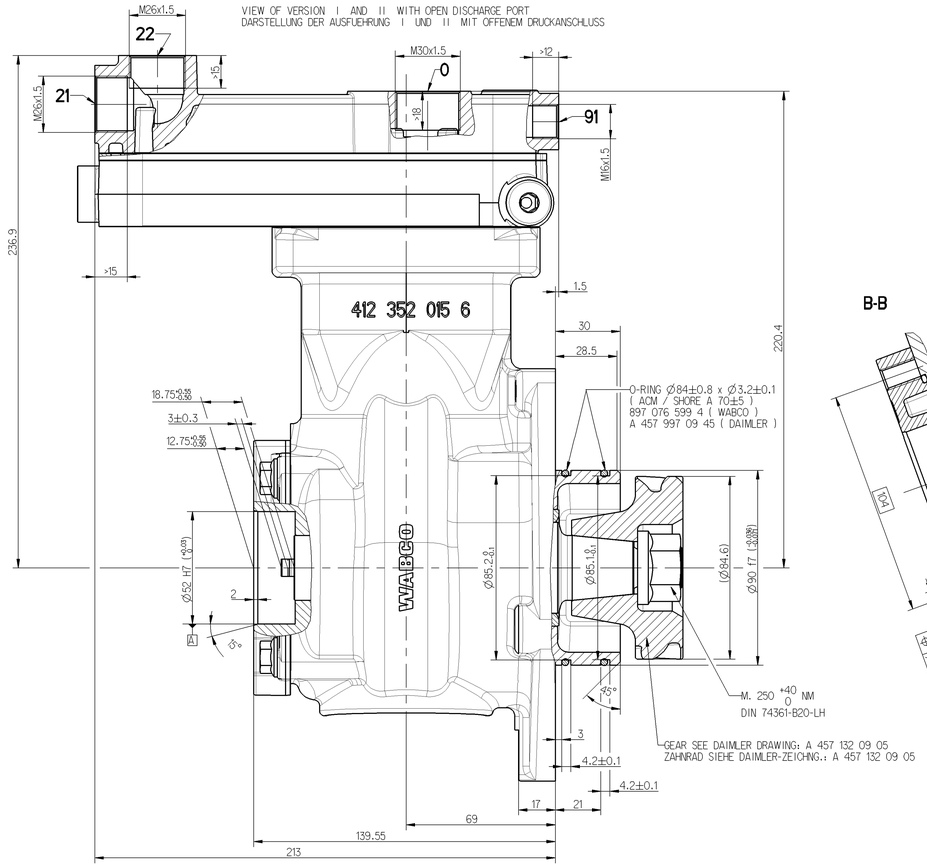

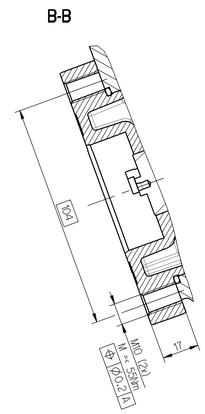

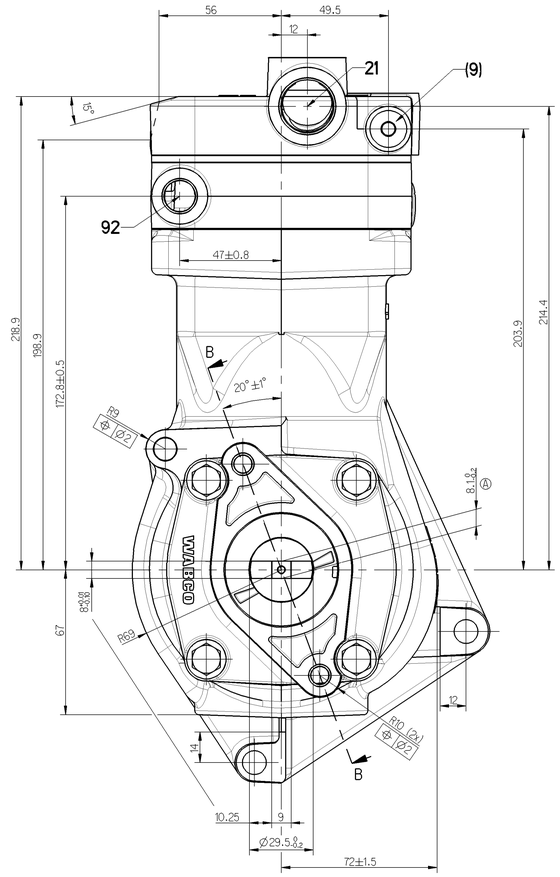

WORKING MEDIUM : BETRIEBSMEDIUM :	AIR LUFT
COOLANT : KUEHLMEDIUM :	WATER WITH ANTIFREEZE WASSER MT FROSTSCHUTZ
BORE : BOHRUNG :	Ø 85 mm
STROKE : HUB :	62 mm
SWEPT VOLUME : HUBRAUM :	352 cm^3
MAX. WORKING SPEED : MAX. BETRIEBSDREHZAHL :	n_{max} = 3000 min^{-1}
OVERSPEED (MAX. 4 SEC) : UEBERDREHZAHL (MAX. 4 SEC) :	n_{ue} = 1.3 x nmax
PORTS PROTECTED ANSCHLUESSE GESCHUETZT Ⓐ	

MAX. WORKING PRESSURE: MAX. BETRIEBSDRUCK :	p_e = 12.5 bar
MAX. PRESSURE AT PRESSERPORT : HOECHSTDRUCK AM DRUCKANSCHLUSS :	p_e = 16 bar
END PLAY OF CRANKSHAFT AXIALSPIEL DER KURBELWELLE	0.1 ... 0.45 mm
LUBRICATION SUPPLIED FROM ENGINE UMLAUFSCHMIERUNG MIT DRUCKÖLANSCHLUSS	

MAX. PERMISSIBLE TILT DURING CONTINUOUS WORKING:
MAX. ZULAESSIGE NEIGUNG IM DAUERBETRIEB:

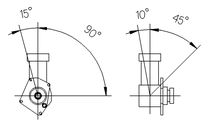

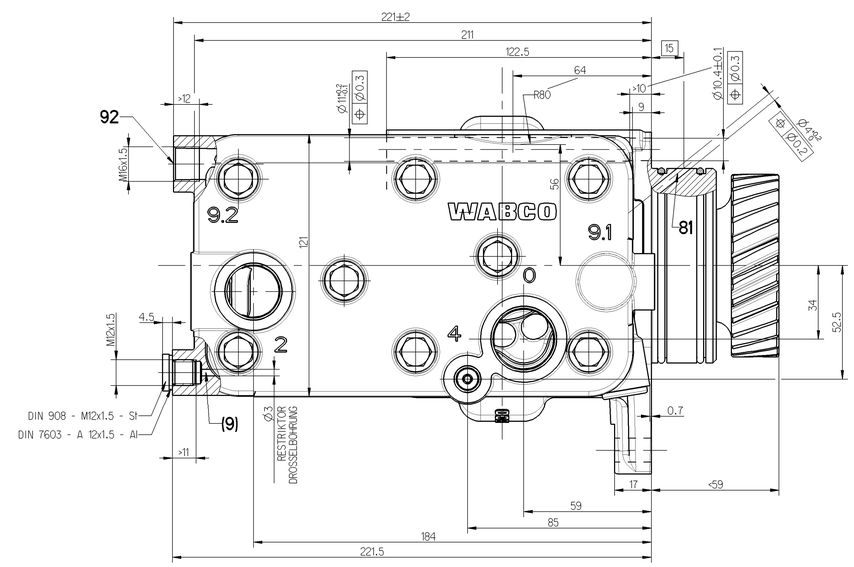

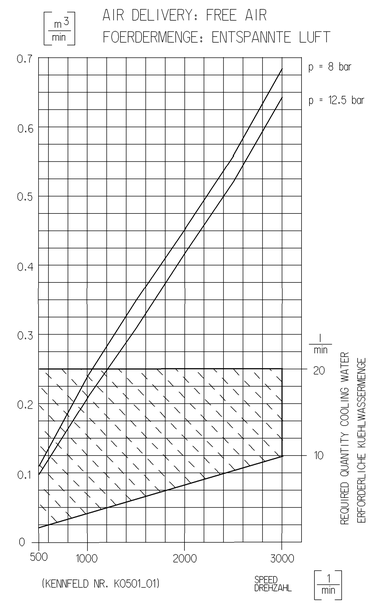

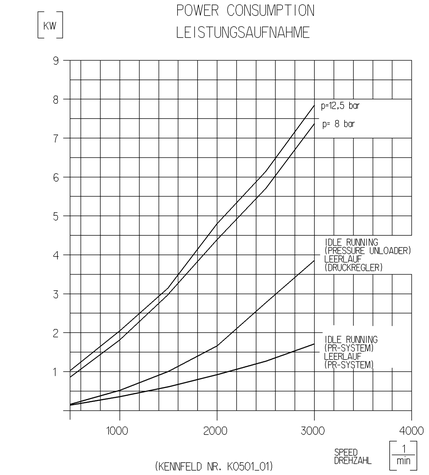

	1-CYL.COMPRESSOR 1-ZYL.-KOMPRESSOR	2-CYL.COMPRESSOR 2-ZYL.-KOMPRESSOR	3-CYL.COMPRESSOR 3-ZYL.-KOMPRESSOR
FURTHER TABULAR DRAWING WEITERE TABELLENZEICHNUNGEN	412 352 000 0 A 457 130 41 15	912 510 102 0 A 457 130 42 15	912 510 301 0 A 457 130 43 15

0	SUCTION PORT SAUGANSCHLUSS	M <= 120 Nm	9.1/9.2 COOLANT CONNECTION KUEHLMITTELANSCHLUSS M <= 35 Nm
21/22	DISCHARGE PORT DRUCKANSCHLUSS	M <= 100 Nm	9.1 ⇄ 9.2 DIRECTIONS OF FLOW DURCHSTROEMRICHTUNGEN
4	GOVERNOR PORT STEUERANSCHLUSS	M <= 25 Nm	(9) VENTING PORT ENTLUEFTUNGSANSCHLUSS M <= 25 Nm
81	OIL SUPPLY DRUCKOELANSCHLUSS		
82	OIL DRAIN OELRUECKLAUF		

(...) AUXILIARY DIMENSION
HILFSMASS

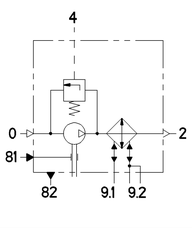

VERSION AUSFUEHR.	WABCO-ID-NUMBER WABCO-NUMMER	DENOMINATION BENENNUNG	CUSTOMER-NUMBER KUNDEN-NUMMER	ZGS	SWEPT VOLUME HUBRAUM	MASS GEWICHT	COMMENT BEMERKUNG	DISCHARGE PORT 21 DRUCKANSCHLUSS 21	DISCHARGE PORT 22 DRUCKANSCHLUSS 22	SURFACE PROTECTION OBERFLAECHENSCHUTZ	
IV	412 352 027 0	SINGLE CYLINDER COMPRESSOR EINZYLINDER KOMPRESSOR	457 130 45 15	001	352 cm^3	14.430	VARIATION OF CONSTRUCTION SEE SHEET 2 ABWEICHENDE DARSTELLUNG AUF BLATT 2	OPEN OFFEN	CLOSED VERSCHLOSSEN	JED-762 DBL 8585	Ⓑ
III	412 352 026 0	SINGLE CYLINDER COMPRESSOR EINZYLINDER KOMPRESSOR	457 130 44 15	001	352 cm^3	14.403	VARIATION OF CONSTRUCTION SEE SHEET 2 ABWEICHENDE DARSTELLUNG AUF BLATT 2	CLOSED VERSCHLOSSEN	OPEN OFFEN	JED-762 DBL 8585	Ⓑ
II	412 352 016 0	SINGLE CYLINDER COMPRESSOR EINZYLINDER KOMPRESSOR	457 130 26 15	008	352 cm^3	14.430	VARIATION OF CONSTRUCTION SEE SHEET 2 ABWEICHENDE DARSTELLUNG AUF BLATT 2	OPEN OFFEN	CLOSED VERSCHLOSSEN	JED-762 DBL 8585	
I	412 352 014 0	SINGLE CYLINDER COMPRESSOR EINZYLINDER KOMPRESSOR	457 130 24 15	008	352 cm^3	14.403	VARIATION OF CONSTRUCTION SEE SHEET 2 ABWEICHENDE DARSTELLUNG AUF BLATT 2	CLOSED VERSCHLOSSEN	OPEN OFFEN	JED-762 DBL 8585	

Ⓒ

DCN-No.	Rev.	Date
190003	1xC	2008-11-04
198956	2xB	2008-09-30
194743	2xA	2007-10-11

State of Revision

General Specifications: JED-334-0
Further Technical Data: #1
Doc.-Code: C05 Sheet: To
General Tolerances JED-261

Class	11	Range of Nominal Dimensions (in mm)				
		≤ 50	> 50 ≤ 180	> 180 ≤ 400	> 400	
Fine		0.5	1.0	1.5	2.0	
Medium	X	1.0	2.0	3.0	4.0	±3°
Coarse		2.0	3.5	5.0	6.5	

Tapped Holes acc. JED-152
11 Tolerance Class Applied Crossmarked

Copyright WABCO ®

Date	Signature	
Drawn 2007-08-21	Bruns	
Checked 2007-08-22	Hoelzel	
Expert	Bruns	

Mass	Scale	Material No.	WABCO US No.: 4029300000
see table kg	1:1	412 352 000 0	Doc.-Code/Language: 053 / EN/Gb fr/It; Sheet: 1/2
Size A 0	Title 515		
Function Code	CAD System Pro/E	Prod. Type 0 0 X	Replacement for

10/mm

WABCO
SINGLE CYLINDER KOMPRESSOR
EINZYLINDER KOMPRESSOR
COMPRESSEUR MONOCYLINDRIQUE
COMPRESSORE MONOCILINDRICO

To prevent injuries to the user be careful to observe the safety and accident prevention regulations of the respective countries. Take appropriate measures to prevent damage to persons and property caused by improper use, improper installation and improper maintenance. Do not remove safety devices, nor place objects or parts in front of them. Do not remove, hide or make illegible any warnings or labels. Observe the operating instructions and the safety and maintenance instructions. Use only original spare parts and accessories. Observe the relevant standards, regulations and directives. Observe the relevant regulations for the prevention of accidents and environmental protection. Observe the relevant regulations for the prevention of fire and explosion. Observe the relevant regulations for the prevention of electrical hazards. Observe the relevant regulations for the prevention of occupational illnesses. Observe the relevant regulations for the prevention of occupational illness. Observe the relevant regulations for the prevention of occupational illness. Observe the relevant regulations for the prevention of occupational illness